PFi Engineering Data

Model Number	Nominal Tons[1]	Fan HP
PFI-0406N-3D1DZ-G1	18	3
PFI-0406N-5D4DZ-J1	33	7.5
PFI-0406N-6D2DZ-J1	35	7.5
PFI-0406N-3D3EZ-H1	23	5
PFI-0406N-4D1EZ-H1	27	5
PFI-0412N-2D4DZ-G2	36	6
PFI-0412N-3D2DZ-H2	49	10
PFI-0412N-4D1DZ-H2	55	10
PFI-0412N-4D3EZ-H2	62	10
PFI-0412N-4D2EZ-J2	67	15
PFI-0412N-5D1EZ-J2	70	15
PFI-0412N-6D1EZ-J2	76	15
PFI-0709N-3D4DS-K1	61	10
PFI-0709N-4D2DS-M1	81	20
PFI-0709N-5D2DS-M1	88	20
PFI-0709N-3D2ES-L1	69	15
PFI-0709N-5D3ES-L1	88	15
PFI-0709N-3D3ES-M1	74	20
PFI-0709N-5D1ES-M1	91	20
PFI-0709N-6D1ES-M1	99	20
PFI-0718N-2D1DS-J2	97	15
PFI-0718N-2D3DS-K2	110	20
PFI-0718N-4D4DS-L2	174	30
PFI-0718N-3D4DS-M2	165	40
PFI-0718N-2D3ES-L2	125	30
PFI-0718N-3D1ES-L2	154	30
PFI-0718N-4D2ES-L2	180	30
PFI-0718N-2D4ES-M2	136	40
PFI-0718N-4D2ES-M2	191	40
PFI-0718N-5D1ES-M2	199	40
PFI-0718N-6D2ES-M2	214	40
PFI-1012N-3D2DS-M1	119	20
PFI-1012N-3D4DS-M1	126	20
PFI-1012N-3D3DS-N1	130	25
PFI-1012N-2D2ES-L1	90	15
PFI-1012N-2D4ES-N1	106	25
PFI-1012N-4D2ES-N1	156	25
PFI-1012N-3D2ES-O1	140	30
PFI-1012N-3D4ES-O1	147	30

Model Number	Nominal Tons[1]	Fan HP
PFI-1012N-4D4ES-O1	168	30
PFI-1012N-6D1ES-O1	186	30
PFI-1212N-3D1DS-M1	136	20
PFI-1212N-3D1DS-N1	143	25
PFI-1212N-3D2DS-N1	148	25
PFI-1212N-3D2DS-O1	154	30
PFI-1212N-5D1DS-O1	188	30
PFI-1212N-3D1DS-P1	157	40
PFI-1212N-4D3DS-P1	194	40
PFI-1212N-2D4ES-M1	120	20
PFI-1212N-2D4ES-N1	125	25
PFI-1212N-3D3ES-N1	162	25
PFI-1212N-2D4ES-O1	130	30
PFI-1212N-3D4ES-O1	173	30
PFI-1212N-3D4ES-P1	184	40
PFI-1212N-4D2ES-P1	203	40
PFI-1212N-5D4ES-P1	223	40
PFI-1212N-6D1ES-P1	232	40
PFI-1218N-2D2DS-O1	178	30
PFI-1218N-2D4DS-P1	202	40
PFI-1218N-3D2DS-P1	241	40
PFI-1218N-3D2DS-Q1	253	50
PFI-1218N-3D3DS-Q1	260	50
PFI-1218N-3D4DS-Q1	269	50
PFI-1218N-2D4ES-P1	213	40
PFI-1218N-3D1ES-R1	272	60
PFI-1218N-3D2ES-R1	282	60
PFI-1218N-3D4ES-R1	297	60
PFI-1218N-4D2ES-Q1	309	50
PFI-1218N-4D2ES-R1	322	60
PFI-1218N-4D4ES-R1	334	60
PFI-1218N-6D3ES-R1	352	60
PFI-1218N-6D1ES-R1	360	60
PFI-1024N-3D2DS-M2	238	40
PFI-1024N-3D4DS-M2	252	40
PFI-1024N-3D3DS-N2	260	50
PFI-1024N-2D2ES-L2	179	30
PFI-1024N-2D4ES-N2	211	50
PFI-1024N-4D2ES-N2	311	50

Model Number	Nominal Tons[1]	Fan HP
PFI-1024N-3D2ES-O2	279	60
PFI-1024N-3D4ES-O2	294	60
PFI-1024N-4D4ES-O2	336	60
PFI-1024N-6D1ES-O2	371	60
PFI-1224N-3D1DS-M2	272	40
PFI-1224N-3D1DS-N2	285	50
PFI-1224N-3D2DS-N2	296	50
PFI-1224N-3D2DS-O2	307	60
PFI-1224N-5D1DS-O2	376	60
PFI-1224N-3D1DS-P2	314	80
PFI-1224N-4D3DS-P2	389	80
PFI-1224N-2D4ES-M2	239	40
PFI-1224N-2D4ES-N2	250	50
PFI-1224N-3D3ES-N2	324	50
PFI-1224N-3D4ES-O2	346	60
PFI-1224N-2D4ES-O2	260	60
PFI-1224N-3D4ES-P2	369	80
PFI-1224N-4D2ES-P2	407	80
PFI-1224N-5D4ES-P2	447	80
PFI-1224N-6D1ES-P2	464	80
PFI-2012N-3D4DS-M2	252	40
PFI-2012N-3D2DS-M2	238	40
PFI-2012N-3D3DS-N2	260	50
PFI-2012N-2D2ES-L2	179	30
PFI-2012N-2D4ES-N2	211	50
PFI-2012N-4D2ES-N2	311	50
PFI-2012N-3D2ES-O2	279	60
PFI-2012N-3D4ES-O2	294	60
PFI-2012N-4D4ES-O2	336	60
PFI-2012N-6D1ES-O2	371	60
PFI-2412N-3D1DS-M2	272	40
PFI-2412N-3D1DS-N2	285	50
PFI-2412N-3D2DS-N2	296	50
PFI-2412N-3D2DS-O2	307	60
PFI-2412N-5D1DS-O2	376	60
PFI-2412N-3D1DS-P2	314	80
PFI-2412N-4D3DS-P2	389	80
PFI-2412N-2D4ES-M2	239	40
PFI-2412N-2D4ES-N2	250	50

Model Number	Nominal Tons[1]	Fan HP
PFI-2412N-3D3ES-N2	324	50
PFI-2412N-2D4ES-O2	260	60
PFI-2412N-3D4ES-O2	346	60
PFI-2412N-3D4ES-P2	369	80
PFI-2412N-4D2ES-P2	407	80
PFI-2412N-5D4ES-P2	447	80
PFI-2412N-6D1ES-P2	464	80
PFI-1236N-2D2DS-O2	357	60
PFI-1236N-2D4DS-P2	403	80
PFI-1236N-3D2DS-P2	483	80
PFI-1236N-3D2DS-Q2	506	100
PFI-1236N-3D3DS-Q2	519	100
PFI-1236N-3D4DS-Q2	537	100
PFI-1236N-2D4ES-P2	425	80
PFI-1236N-3D1ES-R2	545	120
PFI-1236N-3D2ES-R2	564	120
PFI-1236N-3D4ES-R2	594	120
PFI-1236N-4D2ES-Q2	618	100
PFI-1236N-4D2ES-R2	643	120
PFI-1236N-4D4ES-R2	668	120
PFI-1236N-6D3ES-R2	705	120
PFI-1236N-6D1ES-R2	721	120
PFI-2418N-2D2DS-O2	357	60
PFI-2418N-2D4DS-P2	403	80
PFI-2418N-3D2DS-P2	483	80
PFI-2418N-3D2DS-Q2	506	100
PFI-2418N-3D3DS-Q2	519	100
PFI-2418N-3D4DS-Q2	537	100
PFI-2418N-2D4ES-P2	425	80
PFI-2418N-3D1ES-R2	545	120
PFI-2418N-3D2ES-R2	564	120
PFI-2418N-3D4ES-R2	594	120
PFI-2418N-4D2ES-Q2	618	100
PFI-2418N-4D2ES-R2	643	120
PFI-2418N-4D4ES-R2	668	120
PFI-2418N-6D3ES-R2	705	120
PFI-2418N-6D1ES-R2	721	120

XE Models

Model Number	Nominal Tons[1]	Fan HP
PFI-0406N-3D1EZ-G1	20	3
PFI-0406N-4D2DZ-G1	23	3
PFI-0406N-5D1EZ-G1	27	3
PFI-0406N-6D2DZ-H1	32	5
PFI-0412N-3D1DZ-G2	43	6
PFI-0412N-3D2EZ-G2	48	6
PFI-0412N-4D1EZ-G2	54	6
PFI-0412N-5D3EZ-G2	59	6
PFI-0412N-6D1DZ-H2	65	10
PFI-0709N-2D3DS-H1	39	5
PFI-0709N-3D1DS-H1	50	5
PFI-0709N-3D1DS-J1	54	7.5
PFI-0709N-3D1ES-J1	58	7.5
PFI-0709N-3D4ES-J1	61	7.5
PFI-0709N-4D2ES-K1	74	10
PFI-0709N-4D3ES-J1	70	7.5
PFI-0709N-4D4DS-J1	66	7.5
PFI-0709N-5D4DS-K1	76	10
PFI-0709N-6D1ES-K1	85	10
PFI-0709N-6D2ES-L1	93	15
PFI-0718N-2D1DS-H2	91	10
PFI-0718N-2D4ES-J2	113	15
PFI-0718N-3D1DS-H2	115	10
PFI-0718N-3D1DS-J2	124	15
PFI-0718N-3D2DS-J2	128	15
PFI-0718N-3D2DS-K2	136	20
PFI-0718N-4D2DS-J2	143	15
PFI-0718N-4D3DS-K2	154	20
PFI-0718N-4D4ES-K2	167	20
PFI-0718N-5D1ES-K2	173	20
PFI-0718N-5D1ES-L2	188	30
PFI-0718N-5D2ES-K2	176	20
PFI-0718N-6D1DS-J2	159	15
PFI-0718N-6D1ES-K2	183	20
PFI-0718N-6D1ES-L2	200	30

Model Number	Nominal Tons[1]	Fan HP
PFI-1012N-2D2DS-J1	75	7.5
PFI-1012N-2D4ES-K1	88	10
PFI-1012N-3D1DS-L1	109	15
PFI-1012N-3D2DS-K1	103	10
PFI-1012N-3D2ES-L1	121	15
PFI-1012N-3D2ES-M1	129	20
PFI-1012N-3D4DS-L1	118	15
PFI-1012N-4D1DS-J1	109	7.5
PFI-1012N-4D1DS-M1	134	20
PFI-1012N-4D1ES-J1	118	7.5
PFI-1012N-4D1ES-M1	145	20
PFI-1012N-4D3ES-L1	142	15
PFI-1012N-4D3ES-N1	160	25
PFI-1012N-5D2DS-M1	150	20
PFI-1012N-5D2DS-N1	158	25
PFI-1012N-6D1ES-M1	169	20
PFI-1024N-2D2DS-J2	150	15
PFI-1024N-2D4ES-K2	176	20
PFI-1024N-3D1DS-L2	217	30
PFI-1024N-3D2DS-K2	207	20
PFI-1024N-3D2ES-L2	243	30
PFI-1024N-3D2ES-M2	257	40
PFI-1024N-3D4DS-L2	236	30
PFI-1024N-4D1DS-J2	217	15
PFI-1024N-4D1DS-M2	267	40
PFI-1024N-4D1ES-J2	236	15
PFI-1024N-4D1ES-M2	290	40
PFI-1024N-4D3ES-L2	284	30
PFI-1024N-4D3ES-N2	320	50
PFI-1024N-5D2DS-M2	299	40
PFI-1024N-5D2DS-N2	315	50
PFI-1024N-6D1ES-M2	338	40
PFI-1212N-2D4DS-K1	99	10
PFI-1212N-3D2DS-K1	123	10
PFI-1212N-3D2DS-L1	133	15

Model Number	Nominal Tons[1]	Fan HP
PFI-1212N-3D2ES-L1	144	15
PFI-1212N-3D2ES-M1	153	20
PFI-1212N-3D4DS-L1	138	15
PFI-1212N-3D4ES-M1	158	20
PFI-1212N-4D2DS-M1	162	20
PFI-1212N-4D2DS-N1	171	25
PFI-1212N-4D3ES-M1	176	20
PFI-1212N-4D4ES-N1	188	25
PFI-1212N-5D2ES-N1	199	25
PFI-1212N-5D4DS-O1	197	30
PFI-1212N-5D4ES-O1	209	30
PFI-1212N-6D1DS-M1	185	20
PFI-1212N-6D1ES-O1	218	30
PFI-1218N-2D1DS-N1	166	25
PFI-1218N-2D2DS-N1	172	25
PFI-1218N-2D2ES-M1	177	20
PFI-1218N-2D3DS-K1	148	10
PFI-1218N-2D4ES-K1	160	10
PFI-1218N-2D4ES-M1	185	20
PFI-1218N-2D4ES-N1	194	25
PFI-1218N-3D1DS-L1	192	15
PFI-1218N-3D1DS-O1	220	30
PFI-1218N-3D2DS-M1	209	20
PFI-1218N-3D2ES-P1	261	40
PFI-1218N-3D3DS-L1	199	15
PFI-1218N-3D3ES-O1	249	30
PFI-1218N-3D4DS-M1	216	20
PFI-1218N-3D4DS-N1	228	25
PFI-1218N-3D4DS-P1	255	40
PFI-1218N-3D4ES-M1	233	20
PFI-1218N-4D1ES-O1	272	30
PFI-1218N-4D3DS-P1	278	40
PFI-1218N-4D3ES-P1	297	40
PFI-1218N-4D3ES-Q1	313	50
PFI-1218N-4D4DS-M1	238	20

Model Number	Nominal Tons[1]	Fan HP
PFI-1218N-4D4DS-O1	265	30
PFI-1218N-4D4DS-P1	286	40
PFI-1218N-4D4ES-Q1	319	50
PFI-1218N-5D2ES-Q1	330	50
PFI-1224N-2D4DS-K2	199	20
PFI-1224N-3D2DS-K2	246	20
PFI-1224N-3D2DS-L2	266	30
PFI-1224N-3D2ES-L2	288	30
PFI-1224N-3D2ES-M2	305	40
PFI-1224N-3D4DS-L2	277	30
PFI-1224N-3D4ES-M2	316	40
PFI-1224N-4D2DS-M2	324	40
PFI-1224N-4D2DS-N2	341	50
PFI-1224N-4D3ES-M2	352	40
PFI-1224N-4D4ES-N2	376	50
PFI-1224N-5D2ES-N2	397	50
PFI-1224N-5D4DS-O2	395	60
PFI-1224N-5D4ES-O2	419	60
PFI-1224N-6D1DS-M2	370	40
PFI-1224N-6D1ES-O2	435	60
PFI-1236N-2D1DS-N2	332	50
PFI-1236N-2D2DS-N2	344	50
PFI-1236N-2D2ES-M2	354	40
PFI-1236N-2D3DS-K2	297	20
PFI-1236N-2D4ES-K2	320	20
PFI-1236N-2D4ES-M2	370	40
PFI-1236N-2D4ES-N2	388	50
PFI-1236N-3D1DS-L2	385	30
PFI-1236N-3D1DS-O2	439	60
PFI-1236N-3D2DS-M2	417	40
PFI-1236N-3D2ES-P2	522	80
PFI-1236N-3D3DS-L2	397	30
PFI-1236N-3D3ES-O2	498	60
PFI-1236N-3D4DS-M2	433	40
PFI-1236N-3D4DS-N2	456	50

NOTE: For notes on **pages C85 and C86**, see **page C87**.

PFi Engineering Data

XE Models

Model Number	Nominal Tons[1]	Fan HP
PFI-1236N-3D4DS-P2	511	80
PFI-1236N-3D4ES-M2	465	40
PFI-1236N-4D1ES-O2	543	60
PFI-1236N-4D3DS-P2	555	80
PFI-1236N-4D3ES-P2	594	80
PFI-1236N-4D3ES-Q2	625	100
PFI-1236N-4D4DS-M2	477	40
PFI-1236N-4D4DS-O2	529	60
PFI-1236N-4D4DS-P2	571	80
PFI-1236N-4D4ES-Q2	639	100
PFI-1236N-5D2ES-Q2	660	100
PFI-2012N-2D2DS-J2	150	15
PFI-2012N-2D4ES-K2	176	20
PFI-2012N-3D1DS-L2	217	30
PFI-2012N-3D2DS-K2	207	20
PFI-2012N-3D2ES-L2	243	30
PFI-2012N-3D2ES-M2	257	40
PFI-2012N-3D4DS-L2	236	30
PFI-2012N-4D1DS-J2	217	15
PFI-2012N-4D1DS-M2	267	40
PFI-2012N-4D1ES-J2	236	15
PFI-2012N-4D1ES-M2	290	40
PFI-2012N-4D3ES-L2	284	30

Model Number	Nominal Tons[1]	Fan HP
PFI-2012N-4D3ES-N2	320	50
PFI-2012N-5D2DS-M2	299	40
PFI-2012N-5D2DS-N2	315	50
PFI-2012N-6D1ES-M2	338	40
PFI-2412N-2D4DS-K2	199	20
PFI-2412N-3D2DS-K2	246	20
PFI-2412N-3D2DS-L2	266	30
PFI-2412N-3D2ES-L2	288	30
PFI-2412N-3D2ES-M2	305	40
PFI-2412N-3D4DS-L2	277	30
PFI-2412N-3D4ES-M2	316	40
PFI-2412N-4D2DS-M2	324	40
PFI-2412N-4D2DS-N2	341	50
PFI-2412N-4D3ES-M2	352	40
PFI-2412N-4D4ES-N2	376	50
PFI-2412N-5D2ES-N2	397	50
PFI-2412N-5D4DS-O2	395	60
PFI-2412N-5D4ES-O2	419	60
PFI-2412N-6D1DS-M2	370	40
PFI-2412N-6D1ES-O2	435	60
PFI-2418N-2D1DS-N2	332	50
PFI-2418N-2D2DS-N2	344	50
PFI-2418N-2D2ES-M2	354	40

Model Number	Nominal Tons[1]	Fan HP
PFI-2418N-2D3DS-K2	297	20
PFI-2418N-2D4ES-K2	320	20
PFI-2418N-2D4ES-M2	370	40
PFI-2418N-2D4ES-N2	388	50
PFI-2418N-3D1DS-L2	385	30
PFI-2418N-3D1DS-O2	439	60
PFI-2418N-3D2DS-M2	417	40
PFI-2418N-3D2ES-P2	522	80
PFI-2418N-3D3DS-L2	397	30
PFI-2418N-3D3ES-O2	498	60
PFI-2418N-3D4DS-M2	433	40
PFI-2418N-3D4DS-N2	456	50
PFI-2418N-3D4DS-P2	511	80
PFI-2418N-3D4ES-M2	465	40
PFI-2418N-4D1ES-O2	543	60
PFI-2418N-4D3DS-P2	555	80
PFI-2418N-4D3ES-P2	594	80
PFI-2418N-4D3ES-Q2	625	100
PFI-2418N-4D4DS-M2	477	40
PFI-2418N-4D4DS-O2	529	60
PFI-2418N-4D4DS-P2	571	80
PFI-2418N-4D4ES-Q2	639	100
PFI-2418N-5D2ES-Q2	660	100

NOTES:

1. Nominal tons of cooling represents 3 USGPM of water cooled from 95°F to 85°F at a 78°F entering wet-bulb temperature.
2. CFM listed is for the highest fan motor HP and vary with the fan HP.
3. Operating weight is for the unit with the water level in the cold water basin at the overflow.
4. The actual size of the coil inlet and outlet connection may vary with the design flow rate. Consult unit print for dimensions.
5. Coil inlet and outlet connections are beveled for welding.
6. Models with Whisper Quiet Fans may have heights up to 5 1/2" greater than shown.
7. Standard make-up, drain and overflow connections are located near the bottom of the unit. Make-up connection is 1 1/2" MPT standpipe, drain is 2" FPT, and overflow is 3" FPT. Standard make-up, drain, and overflow connections are MPT.

Do not use for construction. Refer to factory certified dimensions. This catalog includes data current at the time of publication, which should be reconfirmed at the time of purchase.

NOTE: Up-to-date engineering data, free product selection software, and more can be found at **www.BaltimoreAircoil.com**.

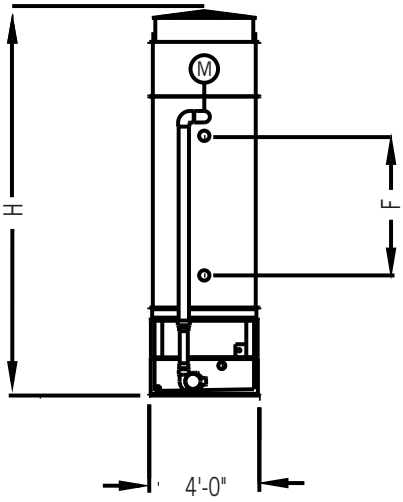

Face A:
PFi-0406 and PFi-0412 Units

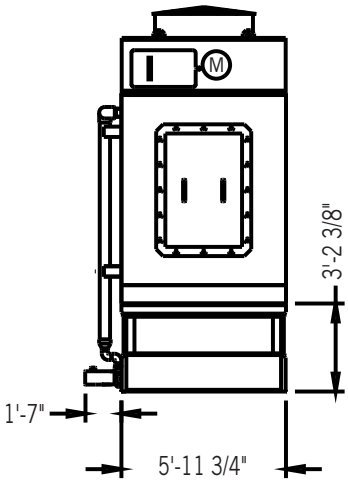

Face D:
PFi-0406 Units

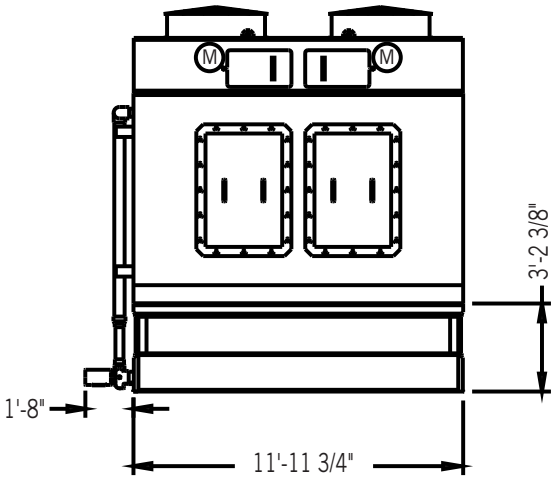

Face D:
PFi-0412 Units

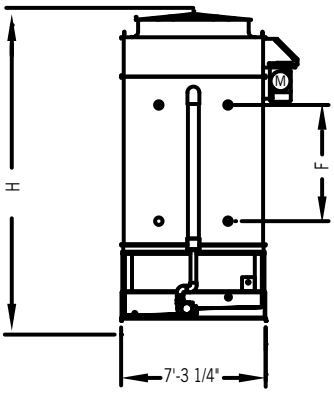

Face A:
PFi-0709 and PFi-0718 Units

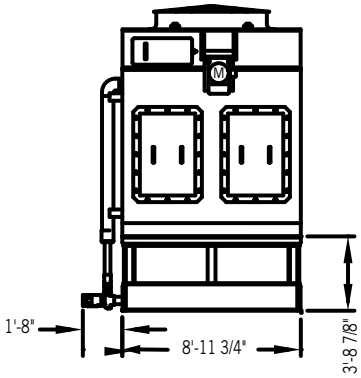

Face D:
PFi-0709 Units

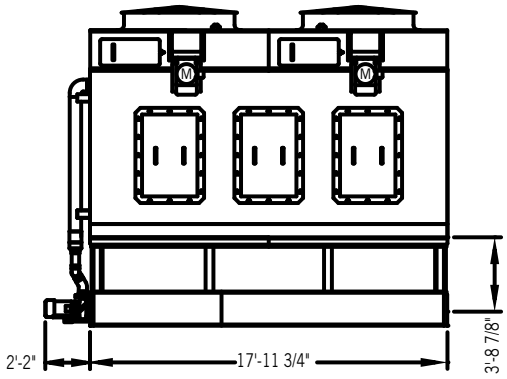

Face D:
PFi-0718 Units

PFi Engineering Data

Model Number	Pump Motor HP	CFM[2]	Approximate Weight (lbs)			Dimensions					Connection Size[4,7]		Spray Pump (USGPM)	Internal Coil Volume (gal)	Riser Pipe Dia.
			Operating Weight[3]	Shipping Weight	Heaviest Section	L	W	H	F	P	Make-Up Water	Coil			
PFI-0406N-3D1DZ-G1	0.75	13,818	4,690	3,204	2,573	6'-0"	4'-0"	12-9"	4'-1"	1'-7"	1 1/2"	4"	60	45	4"
PFI-0406N-5D4DZ-J1		14,944	6,350	4,467	3,833			14'-0"	5'-4"				60	94	
PFI-0406N-6D2DZ-J1		15,668	6,420	4,538	3,903			14'-8"	6'-0"				60	93	
PFI-0406N-3D3EZ-H1		14,922	5,230	3,662	3,028			14'-0"	5'-4"				60	56	
PFI-0406N-4D1EZ-H1		15,127	5,400	3,803	3,168			14'-8"	6'-0"				60	59	
PFI-0412N-2D4DZ-G2	1.5	25,249	8,250	5,391	4,462	12'-0"	4'-0"	12-9"	4'-1"	1'-8"	1 1/2"	4"	130	77	4"
PFI-0412N-3D2DZ-H2		29,496	8,710	5,721	4,792			12-9"	4'-1"				130	94	
PFI-0412N-4D1DZ-H2		28,962	9,250	6,133	5,202			13-5"	4-9"				130	109	
PFI-0412N-4D3EZ-H2		26,498	10,350	7,025	6,092			14'-8"	6'-0"				130	134	
PFI-0412N-4D2EZ-J2		30,905	10,310	7,065	6,132			14'-8"	6'-0"				130	124	
PFI-0412N-5D1EZ-J2		30,741	10,720	7,386	6,452			15'-2"	6'-6"				130	135	
PFI-0412N-6D1EZ-J2		29,728	11,550	8,008	7,072			15'-10"	7'-2"				130	161	
PFI-0709N-3D4DS-K1	1.5	35,841	11,720	7,938	6,743	9'-0"	7'-4"	14'-4"	4'-1"	1'-8"	1 1/2"	4"	180	77	6"
PFI-0709N-4D2DS-M1		45,560	12,480	8,565	7,368			14'-11"	4-9"				180	85	
PFI-0709N-5D2DS-M1		43,379	13,730	9,487	8,288			15'-7"	5'-4"				180	104	
PFI-0709N-3D2ES-L1		42,646	11,740	8,127	6,928			15'-7"	5'-4"				180	67	
PFI-0709N-3D3ES-M1		44,752	12,150	8,437	7,238			15'-7"	5'-4"				180	73	
PFI-0709N-5D3ES-L1		36,886	14,750	10,330	9,128			16'-9"	6'-6"				180	115	
PFI-0709N-5D1ES-M1		43,559	13,700	9,600	8,398			16'-9"	6'-6"				180	96	
PFI-0709N-6D1ES-M1		41,974	14,830	10,442	9,238			17'-4"	7'-2"				180	114	
PFI-0718N-2D1DS-J2	3	78,157	18,510	12,198	9,539	18'-0"	7'-4"	15'-0"	4'-1"	2'-2"	1 1/2"	4"	370	78	6"
PFI-0718N-2D3DS-K2		81,152	19,460	12,888	10,229			15'-0"	4'-1"				370	94	
PFI-0718N-3D4DS-M2		89,793	22,850	15,368	12,709			15'-0"	4'-1"				370	149	
PFI-0718N-4D4DS-L2		77,036	25,550	17,280	14,619			15'-8"	4-9"				370	196	
PFI-0718N-2D3ES-L2		88,667	20,310	13,720	11,059			15'-8"	4-9"				370	95	
PFI-0718N-2D4ES-M2		94,177	20,910	14,180	11,519			15'-8"	4-9"				370	103	
PFI-0718N-3D1ES-L2		88,193	21,570	14,642	11,979			16'-3"	5'-4"				370	115	
PFI-0718N-4D2ES-L2		81,986	24,640	16,864	14,199			16'-11"	6'-0"				370	166	
PFI-0718N-4D2ES-M2		89,651	24,760	16,984	14,319			16'-11"	6'-0"				370	166	
PFI-0718N-5D1ES-M2		88,229	26,030	17,916	15,249			17'-5"	6'-6"				370	187	
PFI-0718N-6D2ES-M2		82,399	29,530	20,438	17,769			18-1"	7'-2"				370	245	

NOTES:

1. Nominal tons of cooling represents 3 USGPM of water cooled from 95°F to 85°F at a 78°F entering wet-bulb temperature.
2. CFM listed is for the highest fan motor HP and vary with the fan HP.
3. Operating weight is for the unit with the water level in the cold water basin at the overflow.
4. The actual size of the coil inlet and outlet connection may vary with the design flow rate. Consult unit print for dimensions.
5. Coil inlet and outlet connections are beveled for welding.
6. Models with Whisper Quiet Fans may have heights up to 5 1/2" greater than shown.
7. Standard make-up, drain and overflow connections are located near the bottom of the unit. Make-up connection is 1 1/2" MPT standpipe, drain is 2" FPT, and overflow is 3" FPT. Standard make-up, drain, and overflow connections are MPT.

Do not use for construction. Refer to factory certified dimensions. This catalog includes data current at the time of publication, which should be reconfirmed at the time of purchase.

XE Models

Model Number	Pump Motor HP	CFM[2]	Approximate Weight (lbs)			Dimensions					Connection Size[4,7]		Spray Pump (USGPM)	Internal Coil Volume (gal)	Riser Pipe Dia.
			Operating Weight[3]	Shipping Weight	Heaviest Section	L	W	H	F	P	Make-Up Water	Coil			
PFI-0406N-4D2DZ-G1	0.75	12,690	5,310	3,666	3,033	6'-0"	4'-0"	13'-5"	4'-9"	1'-7"	1 1/2"	4"	60	65	4"
PFI-0406N-6D2DZ-H1		13,819	6,290	4,413	3,778			14'-8"	6'-0"					93	
PFI-0406N-5D1EZ-G1		12,202	5,810	4,109	3,473			15'-2"	6'-6"					72	
PFI-0406N-3D1EZ-G1		13,264	4,950	3,457	2,823			14'-0"	5'-4"					47	
PFI-0412N-3D1DZ-G2	1.5	25,790	8,390	5,481	4,552	12'-0"	4'-0"	12'-9"	4'-1"	1'-8"	1 1/2"	4"	130	83	4"
PFI-0412N-6D1DZ-H2		26,905	10,900	7,365	6,432			14'-8"	6'-0"					159	
PFI-0412N-3D2EZ-G2		24,211	9,110	6,104	5,172			14'-0"	5'-4"					95	
PFI-0412N-4D1EZ-G2		23,838	9,630	6,505	5,572			14'-8"	6'-0"					110	
PFI-0412N-5D3EZ-G2		21,660	11,290	7,706	6,772			15'-2"	6'-6"					165	
PFI-0709N-2D3DS-H1	1.5	32,210	10,150	6,813	5,618	9'-0"	7'-4"	14'-4"	4'-1"	1'-8"	1 1/2"	4"	180	50	6"
PFI-0709N-3D1DS-H1		32,031	10,660	7,163	5,968			14'-4"	4'-1"					60	
PFI-0709N-3D1DS-J1		36,423	10,710	7,213	6,018			14'-4"	4'-1"					60	
PFI-0709N-4D4DS-J1		30,836	13,170	8,995	7,798			14'-11"	4'-9"					100	
PFI-0709N-5D4DS-K1		31,942	14,630	10,072	8,873			15'-7"	5'-4"					123	
PFI-0709N-3D1ES-J1		34,938	11,250	7,737	6,538			15'-7"	5'-4"					61	
PFI-0709N-3D4ES-J1		31,805	12,300	8,487	7,288			15'-7"	5'-4"					79	
PFI-0709N-4D3ES-J1		31,218	13,300	9,229	8,028			16'-2"	6'-0"					94	
PFI-0709N-4D2ES-K1		35,678	12,850	8,914	7,713			16'-2"	6'-0"					86	
PFI-0709N-6D1ES-K1		33,900	14,650	10,257	9,053			17'-4"	7'-2"					114	
PFI-0709N-6D2ES-L1		37,234	15,440	10,852	9,648			17'-4"	7'-2"					125	
PFI-0718N-2D1DS-H2	3	68,559	18,410	12,098	9,439	18'-0"	7'-4"	15'-0"	4'-1"	2'-2"	1 1/2"	4"	370	78	6"
PFI-0718N-3D1DS-H2		64,773	20,360	13,458	10,799			15'-0"	4'-1"					114	
PFI-0718N-3D1DS-J2		73,661	20,460	13,558	10,899			15'-0"	4'-1"					114	
PFI-0718N-3D2DS-J2		71,982	21,130	14,028	11,369			15'-0"	4'-1"					126	
PFI-0718N-3D2DS-K2		78,769	21,160	14,058	11,399			15'-0"	4'-1"					126	
PFI-0718N-4D2DS-J2		68,205	23,520	15,770	13,109			15'-8"	4'-9"					165	
PFI-0718N-4D3DS-K2		71,012	24,430	16,420	13,759			15'-8"	4'-9"					181	
PFI-0718N-6D1DS-J2		64,509	27,030	18,344	15,679			16'-11"	6'-0"					221	
PFI-0718N-2D4ES-J2		69,056	20,510	13,780	11,119			15'-8"	4'-9"					103	
PFI-0718N-4D4ES-K2		66,399	26,180	17,884	15,219			16'-11"	6'-0"					198	
PFI-0718N-5D1ES-K2		71,125	25,660	17,546	14,879			17'-5"	6'-6"					187	
PFI-0718N-5D2ES-K2		69,210	26,760	18,326	15,659			17'-5"	6'-6"					206	
PFI-0718N-5D1ES-L2		80,693	25,910	17,796	15,129			17'-5"	6'-6"					187	
PFI-0718N-6D1ES-K2		68,676	27,850	19,148	16,479			18'-1"	7'-2"					222	
PFI-0718N-6D1ES-L2		77,841	28,100	19,398	16,729			18'-1"	7'-2"					222	

PFi Engineering Data

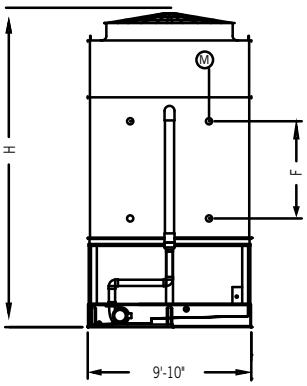

Face A:
PFi-1012 and PF2-1024 Units

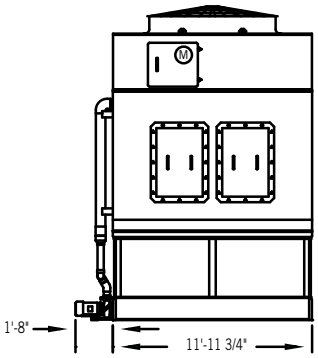

Face D:
PFi-1012 Units

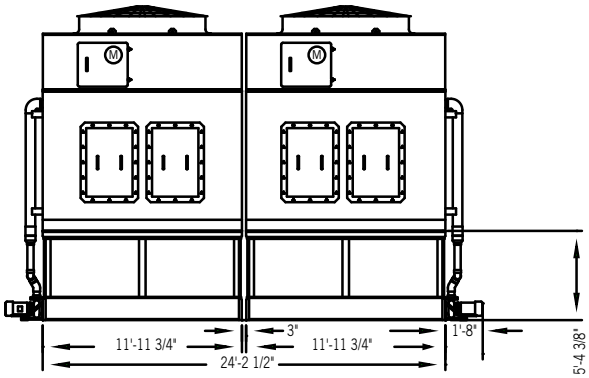

Face D:
PFi-1024 Units

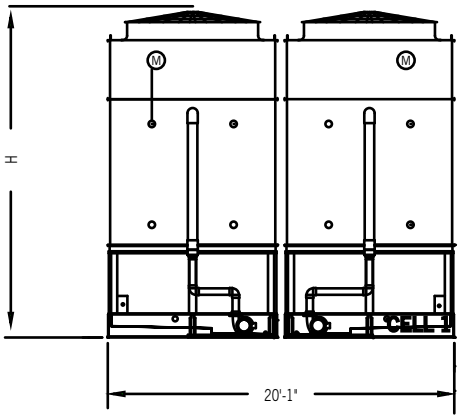

Face A:
PFi-2012 Units

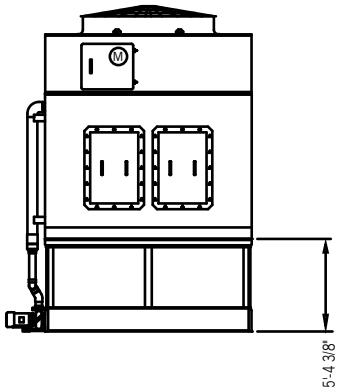

Face D:
PFi-2012 Units

NOTES:

1. Nominal tons of cooling represents 3 USGPM of water cooled from 95°F to 85°F at a 78°F entering wet-bulb temperature.
2. CFM listed is for the highest fan motor HP and vary with the fan HP.
3. Operating weight is for the unit with the water level in the cold water basin at the overflow.
4. The actual size of the coil inlet and outlet connection may vary with the design flow rate. Consult unit print for dimensions.
5. Coil inlet and outlet connections are beveled for welding.
6. Models with Whisper Quiet Fans may have heights up to 5 1/2" greater than shown.
7. Standard make-up, drain and overflow connections are located near the bottom of the unit. Make-up connection is 1 1/2" MPT standpipe, drain is 2" FPT, and overflow is 3" FPT. Standard make-up, drain, and overflow connections are MPT.

Do not use for construction. Refer to factory certified dimensions. This catalog includes data current at the time of publication, which should be reconfirmed at the time of purchase.

Model Number	Pump Motor HP	CFM[2]	Approximate Weight (lbs)			Dimensions					Connection Size[4,7]		Spray Pump (USGPM)	Internal Coil Volume (gal)	Riser Pipe Dia.
			Operating Weight[3]	Shipping Weight	Heaviest Section	L	W	H	F	P	Make-Up Water	Coil			
PFI-1012N-3D2DS-M1	3	74,456	18,250	12,102	10,278	12'-0"	9'-10"	16'-1"	4'-1"	1'-8"	1 1/2"	4"	340	119	6"
PFI-1012N-3D4DS-M1		69,745	19,560	13,032	11,208			16'-1"	4'-1"					142	
PFI-1012N-3D3DS-N1		77,650	19,010	12,652	10,828			16'-1"	4'-1"					132	
PFI-1012N-2D2ES-L1		68,804	16,760	11,183	9,358			16'-9"	4'-9"					84	
PFI-1012N-2D4ES-N1		77,449	17,780	11,943	10,118			16'-9"	4'-9"					100	
PFI-1012N-3D2ES-O1		81,783	19,090	12,915	11,088			17'-4"	5'-4"					121	
PFI-1012N-3D4ES-O1		76,920	20,450	13,885	12,058			17'-4"	5'-4"					144	
PFI-1012N-4D2ES-N1		73,785	21,250	14,467	12,638			18'-0"	6'-0"					157	
PFI-1012N-4D4ES-O1		72,774	23,070	15,777	13,948			18'-0"	6'-0"					188	
PFI-1012N-6D1ES-O1		75,337	24,500	16,861	15,028			19'-2"	7'-2"					209	
PFI-1024N-3D2DS-M2	(2) 3	148,912	36,730	24,437	10,278	24'-3"	9'-10"	17'-1"	4'-1"	1'-8"	1 1/2"	4"	340	119	6"
PFI-1024N-3D4DS-M2		139,490	39,360	26,297	11,208			17'-1"	4'-1"					142	
PFI-1024N-3D3DS-N2		155,300	38,260	25,537	10,828			17'-1"	4'-1"					132	
PFI-1024N-2D2ES-L2		137,608	33,750	22,601	9,358			17'-9"	4'-9"					84	
PFI-1024N-2D4ES-N2		154,898	35,800	24,121	10,118			17'-9"	4'-9"					100	
PFI-1024N-3D2ES-O2		163,566	38,420	26,065	11,088			18'-4"	5'-4"					121	
PFI-1024N-3D4ES-O2		153,840	41,140	28,005	12,058			18'-4"	5'-4"					144	
PFI-1024N-4D2ES-N2		147,570	42,730	29,169	12,638			19'-0"	6'-0"					157	
PFI-1024N-4D4ES-O2		145,548	46,380	31,789	13,948			19'-0"	6'-0"					188	
PFI-1024N-6D1ES-O2		150,674	49,240	33,956	15,028			20'-2"	7'-2"					209	
PFI-2012N-3D2DS-M2	(2) 3	148,912	36,730	24,437	10,278	12'-0"	20'-1"	17'-1"	4'-1"	1'-8"	11/2"	4"	340	119	6"
PFI-2012N-3D4DS-M2		139,490	39,360	26,297	11,208			12'-0"	17'-1"					4-1"	
PFI-2012N-3D3DS-N2		155,300	38,260	25,537	10,828			12'-0"	17'-1"					4-1"	
PFI-2012N-2D2ES-L2		137,608	33,750	22,601	9,358			12'-0"	17'-9"					4-9"	
PFI-2012N-2D4ES-N2		154,898	35,800	24,121	10,118			12'-0"	17'-9"					4-9"	
PFI-2012N-3D2ES-O2		163,566	38,420	26,065	11,088			12'-0"	18'-4"					5-4"	
PFI-2012N-3D4ES-O2		153,840	41,140	28,005	12,058			12'-0"	18'-4"					5-4"	
PFI-2012N-4D2ES-N2		147,570	42,730	29,169	12,638			12'-0"	19'-0"					6'-0"	
PFI-2012N-4D4ES-O2		145,548	46,380	31,789	13,948			12'-0"	19'-0"					6'-0"	
PFI-2012N-6D1ES-O2		150,674	49,240	33,956	15,028			12'-0"	20'-2"					7'-2"	

PFi Engineering Data

XE Models

Model Number	Pump Motor HP	CFM[2]	Approximate Weight (lbs)			Dimensions					Connection Size[4,7]		Spray Pump (USGPM)	Internal Coil Volume (gal)	Riser Pipe Dia.
			Operating Weight[3]	Shipping Weight	Heaviest Section	L	W	H	F	P	Make-Up Water	Coil			
PFI-1012N-2D2DS-J1	3	57,464	16,060	10,512	8,688	12'-0"	9'-10"	16'-1"	4'-1"	1'-8"	1 1/2"	4"	340	83	6"
PFI-1012N-3D2DS-K1		59,772	18,060	11,917	10,093			16'-1"	4'-1"					119	
PFI-1012N-3D1DS-L1		70,000	17,600	11,622	9,798			16'-1"	4'-1"					108	
PFI-1012N-3D4DS-L1		63,788	19,500	12,972	11,148			16'-1"	4'-1"					142	
PFI-1012N-4D1DS-J1		53,860	19,470	12,953	11,128			16'-9"	4'-9"					141	
PFI-1012N-4D1DS-M1		73,413	19,670	13,153	11,328			16'-9"	4'-9"					141	
PFI-1012N-5D2DS-M1		67,961	22,650	15,295	13,468			17'-4"	5'-4"					191	
PFI-1012N-5D2DS-N1		72,791	22,680	15,325	13,498			17'-4"	5'-4"					191	
PFI-1012N-2D4ES-K1		57,734	17,570	11,728	9,903			16'-9"	4'-9"					100	
PFI-1012N-4D1ES-J1		51,901	20,230	13,677	11,848			18'-0"	6'-0"					143	
PFI-1012N-3D2ES-L1		65,557	18,950	12,775	10,948			17'-4"	5'-4"					121	
PFI-1012N-3D2ES-M1		71,875	19,010	12,835	11,008			17'-4"	5'-4"					121	
PFI-1012N-4D3ES-L1		61,099	22,140	15,077	13,248			18'-0"	6'-0"					174	
PFI-1012N-4D1ES-M1		70,993	20,430	13,877	12,048			18'-0"	6'-0"					143	
PFI-1012N-4D3ES-N1		71,657	22,230	15,167	13,338			18'-0"	6'-0"					174	
PFI-1012N-6D1ES-M1		66,403	24,420	16,781	14,948			19'-2"	7'-2"					209	
PFI-1024N-2D2DS-J2	(2) 3	114,928	32,350	21,257	8,688	24'-3"	9'-10"	17'-1"	4'-1"	1'-8"	1 1/2"	4"	340	83	6"
PFI-1024N-3D2DS-K2		119,544	36,360	24,067	10,093			17'-1"	4'-1"					119	
PFI-1024N-3D1DS-L2		140,000	35,430	23,477	9,798			17'-1"	4'-1"					108	
PFI-1024N-3D4DS-L2		127,576	39,240	26,177	11,148			17'-1"	4'-1"					142	
PFI-1024N-4D1DS-J2		107,720	39,180	26,141	11,128			17'-9"	4'-9"					141	
PFI-1024N-4D1DS-M2		146,826	39,580	26,541	11,328			17'-9"	4'-9"					141	
PFI-1024N-5D2DS-M2		135,922	45,530	30,825	13,468			18'-4"	5'-4"					191	
PFI-1024N-5D2DS-N2		145,582	45,590	30,885	13,498			18'-4"	5'-4"					191	
PFI-1024N-2D4ES-K2		115,468	35,370	23,691	9,903			17'-9"	4'-9"					100	
PFI-1024N-3D2ES-L2		131,114	38,140	25,785	10,948			18'-4"	5'-4"					121	
PFI-1024N-3D2ES-M2		143,750	38,260	25,905	11,008			18'-4"	5'-4"					121	
PFI-1024N-4D1ES-J2		103,802	40,690	27,589	11,848			19'-0"	6'-0"					143	
PFI-1024N-4D3ES-L2		122,198	44,520	30,389	13,248			19'-0"	6'-0"					174	
PFI-1024N-4D1ES-M2		141,986	41,090	27,989	12,048			19'-0"	6'-0"					143	
PFI-1024N-4D3ES-N2		143,314	44,700	30,569	13,338			19'-0"	6'-0"					174	
PFI-1024N-6D1ES-M2		132,806	49,080	33,796	14,948			20'-2"	7'-2"					209	
PFI-2012N-2D2DS-J2	(2) 3	114,928	32,350	21,257	8,688	12'-0"	20'-1"	17'-1"	4'-1"	1'-8"	1 1/2"	4"	340	83	6"
PFI-2012N-3D2DS-K2		119,544	36,360	24,067	10,093			17'-1"	4'-1"					119	
PFI-2012N-3D1DS-L2		140,000	35,430	23,477	9,798			17'-1"	4'-1"					108	
PFI-2012N-3D4DS-L2		127,576	39,240	26,177	11,148			17'-1"	4'-1"					142	
PFI-2012N-4D1DS-J2		107,720	39,180	26,141	11,128			17'-9"	4'-9"					141	
PFI-2012N-4D1DS-M2		146,826	39,580	26,541	11,328			17'-9"	4'-9"					141	
PFI-2012N-5D2DS-M2		135,922	45,530	30,825	13,468			18'-4"	5'-4"					191	
PFI-2012N-5D2DS-N2		145,582	45,590	30,885	13,498			18'-4"	5'-4"					191	
PFI-2012N-2D4ES-K2		115,468	35,370	23,691	9,903			17'-9"	4'-9"					100	
PFI-2012N-3D2ES-L2		131,114	38,140	25,785	10,948			18'-4"	5'-4"					121	
PFI-2012N-3D2ES-M2		143,750	38,260	25,905	11,008			18'-4"	5'-4"					121	
PFI-2012N-4D1ES-J2		103,802	40,690	27,589	11,848			19'-0"	6'-0"					143	
PFI-2012N-4D3ES-L2		122,198	44,520	30,389	13,248			19'-0"	6'-0"					174	
PFI-2012N-4D1ES-M2		141,986	41,090	27,989	12,048			19'-0"	6'-0"					143	
PFI-2012N-4D3ES-N2		143,314	44,700	30,569	13,338			19'-0"	6'-0"					174	
PFI-2012N-6D1ES-M2		132,806	49,080	33,796	14,948			20'-2"	7'-2"					209	

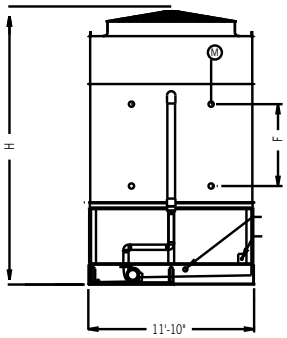

Face A:
PFi-1212 and PF2-1224 Units

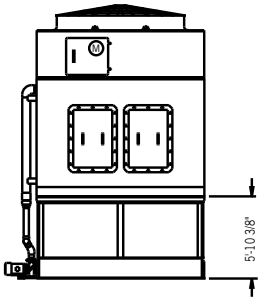

Face D:
PFi-1212 Units

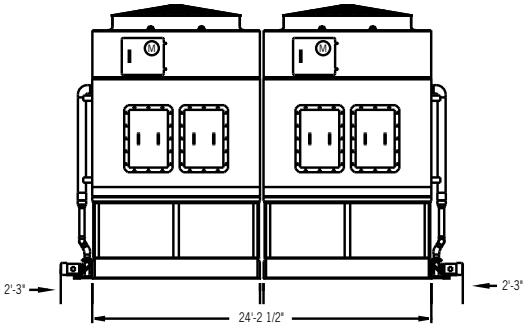

Face D:
PFi-1224 Units

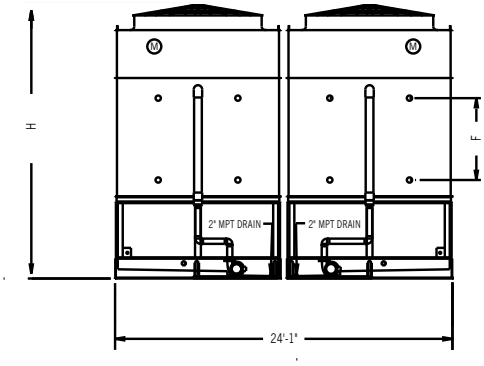

Face A:
PFi-2412 Units

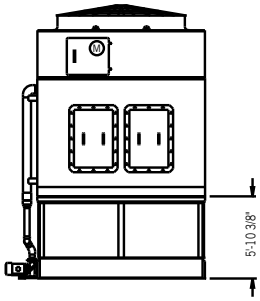

Face D:
PFi-2412 Units

NOTES:

1. Nominal tons of cooling represents 3 USGPM of water cooled from 95°F to 85°F at a 78°F entering wet-bulb temperature.
2. CFM listed is for the highest fan motor HP and vary with the fan HP.
3. Operating weight is for the unit with the water level in the cold water basin at the overflow.
4. The actual size of the coil inlet and outlet connection may vary with the design flow rate. Consult unit print for dimensions.
5. Coil inlet and outlet connections are beveled for welding.
6. Models with Whisper Quiet Fans may have heights up to 5 1/2" greater than shown.
7. Standard make-up, drain and overflow connections are located near the bottom of the unit. Make-up connection is 1 1/2" MPT standpipe, drain is 2" FPT, and overflow is 3" FPT. Standard make-up, drain, and overflow connections are MPT.

Do not use for construction. Refer to factory certified dimensions. This catalog includes data current at the time of publication, which should be reconfirmed at the time of purchase.

PFi Engineering Data

Model Number	Pump Motor HP	CFM[2]	Approximate Weight (lbs)			Dimensions					Connection Size[4,7]		Spray Pump (USGPM)	Internal Coil Volume (gal)	Riser Pipe Dia.
			Operating Weight[3]	Shipping Weight	Heaviest Section	L	W	H	F	P	Make-Up Water	Coil			
PFI-1212N-3D1DS-M1	5	89,312	20,960	13,991	11,495	12'-0"	11-10"	16'-10"	4'-1"	2'-3"	1 1/2"	4"	410	133	6"
PFI-1212N-3D1DS-N1		96,010	20,990	14,021	11,525			16'-10"	4'-1"					133	
PFI-1212N-3D2DS-N1		92,736	21,730	14,541	12,045			16'-10"	4'-1"					146	
PFI-1212N-3D2DS-O1		98,179	21,780	14,591	12,095			16'-10"	4'-1"					146	
PFI-1212N-3D1DS-P1		111,413	21,200	14,231	11,735			16'-10"	4'-1"					133	
PFI-1212N-5D1DS-O1		92,991	25,940	17,625	15,125			18'-1"	5'-4"					214	
PFI-1212N-4D3DS-P1		96,998	25,590	17,373	14,875			17'-6"	4'-9"					208	
PFI-1212N-2D4ES-M1		83,516	21,050	14,243	11,745			17'-6"	4'-9"					123	
PFI-1212N-2D4ES-N1		89,580	21,080	14,273	11,775			17'-6"	4'-9"					123	
PFI-1212N-2D4ES-O1		95,034	21,130	14,323	11,825			17'-6"	4'-9"					123	
PFI-1212N-3D3ES-N1		86,012	23,370	15,925	13,425			18'-1"	5'-4"					161	
PFI-1212N-3D4ES-O1		88,852	24,320	16,615	14,115			18'-1"	5'-4"					177	
PFI-1212N-3D4ES-P1		97,174	24,480	16,775	14,275			18'-1"	5'-4"					177	
PFI-1212N-4D2ES-P1		98,942	25,490	17,527	15,025			18'-9"	6'-0"					193	
PFI-1212N-5D4ES-P1		87,447	30,820	21,329	18,825			19'-3"	6'-6"					285	
PFI-1212N-6D1ES-P1		95,478	29,370	20,350	17,845			19'-11"	7'-2"					256	
PFI-1224N-3D1DS-M2	(2) 5	178,624	42,160	28,216	11,495	24'-3"	11'-10"	17'-10"	4'-1"	2'-3"	1 1/2"	4"	410	133	6"
PFI-1224N-3D1DS-N2		192,020	42,220	28,276	11,525			17'-10"	4'-1"					133	
PFI-1224N-3D2DS-N2		185,472	43,690	29,316	12,045			17'-10"	4'-1"					146	
PFI-1224N-3D2DS-O2		196,358	43,790	29,416	12,095			17'-10"	4'-1"					146	
PFI-1224N-3D1DS-P2		222,826	42,640	28,696	11,735			17'-10"	4'-1"					133	
PFI-1224N-5D1DS-O2		185,982	52,110	35,483	15,125			19'-1"	5'-4"					214	
PFI-1224N-4D3DS-P2		193,996	51,400	34,980	14,875			18'-6"	4'-9"					208	
PFI-1224N-2D4ES-M2		167,032	42,330	28,720	11,745			18'-6"	4'-9"					123	
PFI-1224N-2D4ES-N2		179,160	42,390	28,780	11,775			18'-6"	4'-9"					123	
PFI-1224N-2D4ES-O2		190,068	42,490	28,880	11,825			18'-6"	4'-9"					123	
PFI-1224N-3D3ES-N2		172,024	46,970	32,083	13,425			19'-1"	5'-4"					161	
PFI-1224N-3D4ES-O2		177,704	48,870	33,463	14,115			19'-1"	5'-4"					177	
PFI-1224N-3D4ES-P2		194,348	49,190	33,783	14,275			19'-1"	5'-4"					177	
PFI-1224N-4D2ES-P2		197,884	51,220	35,287	15,025			19'-9"	6'-0"					193	
PFI-1224N-5D4ES-P2		174,894	61,880	42,891	18,825			20'-3"	6'-6"					285	
PFI-1224N-6D1ES-P2		190,956	58,980	40,935	17,845			20'-11"	7'-2"					256	
PFI-2412N-3D1DS-M2	(2) 5	178,624	42,160	28,216	11,495	12'-0"	24'-1"	17'-10"	4'-1"	2'-3"	1 1/2"	4"	410	133	6"
PFI-2412N-3D1DS-N2		192,020	42,220	28,276	11,525			17'-10"	4'-1"					133	
PFI-2412N-3D2DS-N2		185,472	43,690	29,316	12,045			17'-10"	4'-1"					146	
PFI-2412N-3D2DS-O2		196,358	43,790	29,416	12,095			17'-10"	4'-1"					146	
PFI-2412N-3D1DS-P2		222,826	42,640	28,696	11,735			17'-10"	4'-1"					133	
PFI-2412N-4D3DS-P2		193,996	51,400	34,980	14,875			18'-6"	4'-9"					208	
PFI-2412N-5D1DS-O2		185,982	52,110	35,483	15,125			19'-1"	5'-4"					214	
PFI-2412N-2D4ES-M2		167,032	42,330	28,720	11,745			18'-6"	4'-9"					123	
PFI-2412N-2D4ES-N2		179,160	42,390	28,780	11,775			18'-6"	4'-9"					123	
PFI-2412N-2D4ES-O2		190,068	42,490	28,880	11,825			18'-6"	4'-9"					123	
PFI-2412N-3D3ES-N2		172,024	46,970	32,083	13,425			19'-1"	5'-4"					161	
PFI-2412N-3D4ES-O2		177,704	48,870	33,463	14,115			19'-1"	5'-4"					177	
PFI-2412N-3D4ES-P2		194,348	49,190	33,783	14,275			19'-1"	5'-4"					177	
PFI-2412N-4D2ES-P2		197,884	51,220	35,287	15,025			19'-9"	6'-0"					193	
PFI-2412N-5D4ES-P2		174,894	61,880	42,891	18,825			20'-3"	6'-6"					285	
PFI-2412N-6D1ES-P2		190,956	58,980	40,935	17,845			20'-11"	7'-2"					256	

XE Models

Model Number	Pump Motor HP	CFM[2]	Approximate Weight (lbs)			Dimensions					Connection Size[4,7]		Spray Pump (USGPM)	Internal Coil Volume (gal)	Riser Pipe Dia.
			Operating Weight[3]	Shipping Weight	Heaviest Section	L	W	H	F	P	Make-Up Water	Coil			
PFI-1212N-2D4DS-K1	5	69,622	20,180	13,416	10,920	12'-0"	11-10"	16'-10"	4'-1"	2'-3"	1 1/2"	4"	410	121	6"
PFI-1212N-3D2DS-K1		69,418	21,510	14,326	11,830			16'-10"	4'-1"					146	
PFI-1212N-3D2DS-L1		78,929	21,640	14,451	11,955			16'-10"	4'-1"					146	
PFI-1212N-3D4DS-L1		73,778	23,250	15,591	13,095			16'-10"	4'-1"					174	
PFI-1212N-4D2DS-M1		82,155	24,380	16,453	13,955			17'-6"	4'-9"					191	
PFI-1212N-4D2DS-N1		88,051	24,410	16,483	13,985			17'-6"	4'-9"					191	
PFI-1212N-6D1DS-M1		79,155	28,300	19,317	16,815			18'-9"	6'-0"					254	
PFI-1212N-5D4DS-O1		81,699	29,770	20,325	17,825			18'-1"	4'-4"					282	
PFI-1212N-3D2ES-L1		76,019	22,520	15,295	12,795			18'-1"	4'-4"					148	
PFI-1212N-3D2ES-M1		83,334	22,580	15,355	12,855			18'-1"	4'-4"					148	
PFI-1212N-3D4ES-M1		78,284	24,240	16,535	14,035			18'-1"	4'-4"					177	
PFI-1212N-4D3ES-M1		76,240	26,240	17,987	15,485			18'-9"	6'-0"					210	
PFI-1212N-4D4ES-N1		79,439	27,460	18,857	16,355			18'-9"	6'-0"					231	
PFI-1212N-5D2ES-N1		81,995	27,940	19,229	16,725			19'-3"	6'-6"					238	
PFI-1212N-5D4ES-O1		80,117	30,660	21,169	18,665			19'-3"	6'-6"					285	
PFI-1212N-6D1ES-O1		87,338	29,210	20,190	17,685			19'-11"	7'-2"					256	
PFI-1224N-2D4DS-K2	(2) 5	139,244	40,590	27,066	10,920	24'-3"	11-10"	17'-10"	4'-1"	2'-3"	1 1/2"	4"	410	121	6"
PFI-1224N-3D2DS-K2		138,836	43,260	28,886	11,830			17'-10"	4'-1"					146	
PFI-1224N-3D2DS-L2		157,858	43,510	29,136	11,955			17'-10"	4'-1"					146	
PFI-1224N-3D4DS-L2		147,556	46,730	31,416	13,095			17'-10"	4'-1"					174	
PFI-1224N-4D2DS-M2		164,310	49,000	33,140	13,955			18'-6"	4'-9"					191	
PFI-1224N-4D2DS-N2		176,102	49,060	33,200	13,985			18'-6"	4'-9"					191	
PFI-1224N-5D4DS-O2		163,398	59,780	40,883	17,825			19'-1"	4'-4"					282	
PFI-1224N-6D1DS-M2		158,310	56,840	38,867	16,815			19'-9"	6'-0"					254	
PFI-1224N-3D2ES-L2		152,038	45,270	30,823	12,795			19'-1"	4'-4"					148	
PFI-1224N-3D2ES-M2		166,668	45,390	30,943	12,855			19'-1"	4'-4"					148	
PFI-1224N-3D4ES-M2		156,568	48,710	33,303	14,035			19'-1"	4'-4"					177	
PFI-1224N-4D3ES-M2		152,480	52,710	36,207	15,485			19'-9"	6'-0"					210	
PFI-1224N-4D4ES-N2		158,878	55,150	37,947	16,355			19'-9"	6'-0"					231	
PFI-1224N-5D2ES-N2		163,990	56,110	38,691	16,725			20'-3"	6'-6"					238	
PFI-1224N-5D4ES-O2		160,234	61,560	42,571	18,665			20'-3"	6'-6"					285	
PFI-1224N-6D1ES-O2		174,676	58,660	40,615	17,685			20'-11"	7'-2"					256	
PFI-2412N-2D4DS-K2	(2) 5	139,244	40,590	27,066	10,920	12'-0"	24'-1"	17'-10"	4'-1"	2'-3"	1 1/2"	4"	410	121	6"
PFI-2412N-3D2DS-K2		138,836	43,260	28,886	11,830			12'-0"	17'-10"					146	
PFI-2412N-3D2DS-L2		157,858	43,510	29,136	11,955			12'-0"	17'-10"					146	
PFI-2412N-3D4DS-L2		147,556	46,730	31,416	13,095			12'-0"	17'-10"					174	
PFI-2412N-4D2DS-M2		164,310	49,000	33,140	13,955			12'-0"	18'-6"					191	
PFI-2412N-4D2DS-N2		176,102	49,060	33,200	13,985			12'-0"	18'-6"					191	
PFI-2412N-6D1DS-M2		158,310	56,840	38,867	16,815			12'-0"	19'-9"					254	
PFI-2412N-3D2ES-L2		152,038	45,270	30,823	12,795			12'-0"	19'-1"					148	
PFI-2412N-3D2ES-M2		166,668	45,390	30,943	12,855			12'-0"	19'-1"					148	
PFI-2412N-3D4ES-M2		156,568	48,710	33,303	14,035			12'-0"	19'-1"					177	
PFI-2412N-4D3ES-M2		152,480	52,710	36,207	15,485			12'-0"	19'-9"					210	
PFI-2412N-4D4ES-N2		158,878	55,150	37,947	16,355			12'-0"	19'-9"					231	
PFI-2412N-5D4DS-O2		163,398	59,780	40,883	17,825			12'-0"	19'-1"					282	
PFI-2412N-5D2ES-N2		163,990	56,110	38,691	16,725			12'-0"	20'-3"					238	
PFI-2412N-5D4ES-O2		160,234	61,560	42,571	18,665			12'-0"	20'-3"					285	
PFI-2412N-6D1ES-O2		174,676	58,660	40,615	17,685			12'-0"	20'-11"					256	

PFi Engineering Data

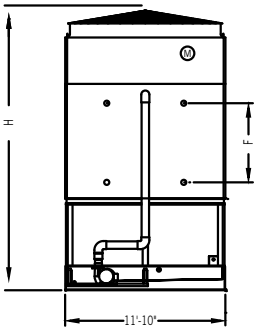

Face A:
PFi-1218 and PFi-1236 Units

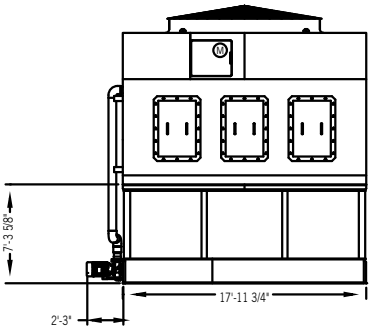

Face D:
PFi-1218 Units

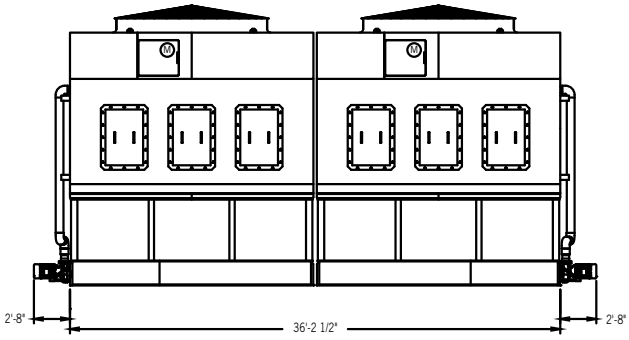

Face D:
PFi-1236 Units

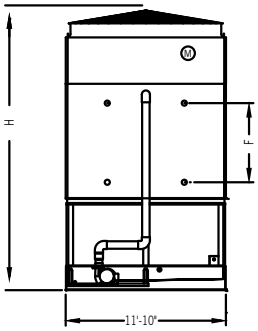

Face A:
PFi-2418 Units

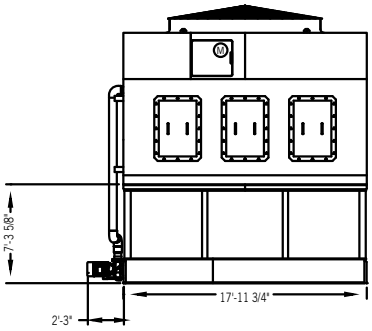

Face D:
PFi-2418 Units

NOTES:

1. Nominal tons of cooling represents 3 USGPM of water cooled from 95°F to 85°F at a 78°F entering wet-bulb temperature.
2. CFM listed is for the highest fan motor HP and vary with the fan HP.
3. Operating weight is for the unit with the water level in the cold water basin at the overflow.
4. The actual size of the coil inlet and outlet connection may vary with the design flow rate. Consult unit print for dimensions.
5. Coil inlet and outlet connections are beveled for welding.
6. Models with Whisper Quiet Fans may have heights up to 5 1/2" greater than shown.
7. Standard make-up, drain and overflow connections are located near the bottom of the unit. Make-up connection is 1 1/2" MPT standpipe, drain is 2" FPT, and overflow is 3" FPT. Standard make-up, drain, and overflow connections are MPT.

Do not use for construction. Refer to factory certified dimensions. This catalog includes data current at the time of publication, which should be reconfirmed at the time of purchase.

Model Number	Pump Motor HP	CFM[2]	Approximate Weight (lbs)			Dimensions					Connection Size[4,7]		Spray Pump (USGPM)	Internal Coil Volume (gal)	Riser Pipe Dia.
			Operating Weight[3]	Shipping Weight	Heaviest Section	L	W	H	F	P	Make-Up Water	Coil			
PFI-1218N-2D2DS-O1		137,938	29,280	19,082	15,043			18'-0"	4'-1"					147	
PFI-1218N-2D4DS-P1		143,143	31,110	20,442	16,403			18'-0"	4'-1"					176	
PFI-1218N-2D4ES-P1		138,021	32,010	21,293	17,253			18'-7"	4'-9"					178	
PFI-1218N-3D2DS-P1		142,506	33,120	21,802	17,763			17'-8"	4'-1"					215	
PFI-1218N-3D2DS-Q1		152,884	33,140	21,827	17,788			17'-8"	4'-1"					215	
PFI-1218N-3D3DS-Q1		146,471	34,240	22,607	18,568			17'-8"	4'-1"					234	
PFI-1218N-3D4DS-Q1		142,633	35,570	23,547	19,508			17'-8"	4'-1"					257	
PFI-1218N-3D1ES-R1	5	161,468	33,360	22,335	18,293	18'-0"	11-10"	18'-11"	5'-4"	2'-3"	1 1/2"	4"	610	197	6"
PFI-1218N-3D2ES-R1		156,524	34,500	23,145	19,103			18'-11"	5'-4"					217	
PFI-1218N-3D4ES-R1		146,826	36,990	24,925	20,883			18'-11"	5'-4"					260	
PFI-1218N-4D2ES-Q1		140,940	38,310	25,832	21,788			19'-6"	6'-0"					284	
PFI-1218N-4D2ES-R1		149,241	38,510	26,037	21,993			19'-6"	6'-0"					284	
PFI-1218N-4D4ES-R1		138,782	41,780	28,357	24,313			19'-6"	6'-0"					341	
PFI-1218N-6D3ES-R1		130,998	48,580	33,221	29,173			20'-8"	7'-2"					458	
PFI-1218N-6D1ES-R1		143,981	44,210	30,131	26,083			20'-8"	7'-2"					381	
PFI-1236N-2D2DS-O2		275,876	58,840	38,451	15,043			18'-8"	4'-1"					147	
PFI-1236N-2D4DS-P2		286,286	62,510	41,171	16,403			18'-8"	4'-1"					176	
PFI-1236N-2D4ES-P2		276,042	64,300	42,875	17,253			19'-3"	4'-9"					178	
PFI-1236N-3D1ES-R2		322,936	67,010	44,959	18,293			19'-11"	5'-4"					197	
PFI-1236N-3D2DS-P2		285,012	66,520	43,891	17,763			18'-8"	4'-1"					215	
PFI-1236N-3D2DS-Q2		305,768	66,570	43,941	17,788			18'-8"	4'-1"					215	
PFI-1236N-3D2ES-R2		313,048	69,290	46,579	19,103			19'-11"	5'-4"					217	
PFI-1236N-3D3DS-Q2	(2) 5	292,942	68,780	45,501	18,568	36'-3"	11'-10"	18'-8"	4'-1"	2'-3"	1 1/2"	4"	610	234	6"
PFI-1236N-3D4DS-Q2		285,266	71,430	47,381	19,508			18'-8"	4'-1"					257	
PFI-1236N-3D4ES-R2		293,652	74,280	50,139	20,883			19'-11"	5'-4"					260	
PFI-1236N-4D2ES-Q2		281,880	76,900	51,953	21,788			20'-6"	6'-0"					284	
PFI-1236N-4D2ES-R2		298,482	77,310	52,363	21,993			20'-6"	6'-0"					284	
PFI-1236N-4D4ES-R2		277,564	83,850	57,003	24,313			20'-6"	6'-0"					341	
PFI-1236N-6D1ES-R2		287,962	88,700	60,550	26,083			21-8"	7'-2"					381	
PFI-1236N-6D3ES-R2		261,996	97,460	66,730	29,173			21-8"	7'-2"					458	
PFI-2418N-2D2DS-O2		275,876	58,980	38,595	15,043			19'-2"	4'-1"					147	
PFI-2418N-2D4DS-P2		286,286	62,650	41,315	16,403			19'-2"	4'-1"					176	
PFI-2418N-2D4ES-P2		276,042	64,450	43,019	17,253			19'-9"	4'-9"					178	
PFI-2418N-3D1ES-R2		322,936	67,160	45,103	18,293			20'-5"	5'-4"					197	
PFI-2418N-3D2DS-P2		285,012	66,670	44,035	17,763			19'-2"	4'-1"					215	
PFI-2418N-3D2DS-Q2		305,768	66,720	44,085	17,788			19'-2"	4'-1"					215	
PFI-2418N-3D2ES-R2		313,048	69,430	46,723	19,103			20'-5"	5'-4"					217	
PFI-2418N-3D3DS-Q2	(2) 5	292,942	68,920	45,645	18,568	18'-0"	24'-1"	19'-2"	4'-1"	2'-3"	1 1/2"	4"	610	234	6"
PFI-2418N-3D4DS-Q2		285,266	71,570	47,525	19,508			19'-2"	4'-1"					257	
PFI-2418N-3D4ES-R2		293,652	74,420	50,283	20,883			20'-5"	5'-4"					260	
PFI-2418N-4D2ES-Q2		281,880	77,050	52,097	21,788			21'-0"	6'-0"					284	
PFI-2418N-4D2ES-R2		298,482	77,460	52,507	21,993			21'-0"	6'-0"					284	
PFI-2418N-4D4ES-R2		277,564	84,000	57,147	24,313			21'-0"	6'-0"					341	
PFI-2418N-6D1ES-R2		287,962	88,850	60,694	26,083			22'-2"	7'-2"					381	
PFI-2418N-6D3ES-R2		261,996	97,600	66,874	29,173			22'-2"	7'-2"					458	

PFi Engineering Data

XE Models

Model Number	Pump Motor HP	CFM[2]	Approximate Weight (lbs)			Dimensions					Connection Size[4,7]		Spray Pump (USGPM)	Internal Coil Volume (gal)	Riser Pipe Dia.
			Operating Weight[3]	Shipping Weight	Heaviest Section	L	W	H	F	P	Make-Up Water	Coil			
PFI-1218N-2D1DS-N1		133,547	28,460	18,482	14,443			18'-0"	4'-1"					134	
PFI-1218N-2D2DS-N1		130,083	29,230	19,032	14,993			18'-0"	4'-1"					147	
PFI-1218N-2D2ES-M1		115,705	30,040	19,813	15,773			18'-7"	4'-9"					149	
PFI-1218N-2D3DS-K1		93,769	29,780	19,367	15,328			18'-0"	4'-1"					160	
PFI-1218N-2D4ES-K1		88,365	31,580	20,868	16,828			18'-7"	4'-9"					178	
PFI-1218N-2D4ES-M1		110,590	31,770	21,053	17,013			18'-7"	4'-9"					178	
PFI-1218N-2D4ES-N1		118,788	31,800	21,083	17,043			18'-7"	4'-9"					178	
PFI-1218N-3D1DS-L1		107,718	31,720	20,722	16,683			18'-0"	4'-1"					195	
PFI-1218N-3D1DS-O1		134,444	31,860	20,862	16,823			17'-8"	4'-1"					195	
PFI-1218N-3D2DS-M1		114,411	32,880	21,562	17,523			18'-0"	4'-1"					215	
PFI-1218N-3D2ES-P1		137,532	34,270	22,915	18,873			18'-11"	5'-4"					217	
PFI-1218N-3D3DS-L1		100,389	33,920	22,282	18,243			18'-0"	4'-1"					234	
PFI-1218N-3D3ES-O1	5	120,783	35,240	23,565	19,523	18'-0"	11'-10"	18'-11"	5'-4"	2'-3"	11/2"	4"	610	236	6"
PFI-1218N-3D4DS-M1		107,218	35,310	23,282	19,243			17'-8"	4'-1"					257	
PFI-1218N-3D4DS-N1		114,911	35,340	23,312	19,273			17'-8"	4'-1"					257	
PFI-1218N-3D4DS-P1		133,097	35,550	23,522	19,483			17'-8"	4'-1"					257	
PFI-1218N-3D4ES-M1		103,991	36,520	24,455	20,413			18'-11"	5'-4"					260	
PFI-1218N-4D1ES-O1		124,147	36,630	24,587	20,543			19'-6"	6'-0"					258	
PFI-1218N-4D3DS-P1		129,200	38,560	25,693	21,653			18'-3"	4'-9"					308	
PFI-1218N-4D3ES-P1		125,770	39,760	26,857	22,813			19'-6"	6'-0"					310	
PFI-1218N-4D3ES-Q1		134,824	39,790	26,882	22,838			19'-6"	6'-0"					310	
PFI-1218N-4D4DS-M1		101,265	40,060	26,683	22,643			18'-3"	4'-9"					339	
PFI-1218N-4D4DS-O1		114,794	40,140	26,763	22,723			18'-3"	4'-9"					339	
PFI-1218N-4D4DS-P1		125,409	40,300	26,923	22,883			18'-3"	4'-9"					339	
PFI-1218N-4D4ES-Q1		131,183	41,580	28,152	24,108			19'-6"	6'-0"					341	
PFI-1218N-5D2ES-Q1		135,249	42,210	28,614	24,568			20'-1"	6'-6"					352	
PFI-1236N-2D1DS-N2		267,094	57,210	37,251	14,443			18'-8"	4'-1"					134	
PFI-1236N-2D2DS-N2		260,166	58,740	38,351	14,993			18'-8"	4'-1"					147	
PFI-1236N-2D2ES-M2		231,410	60,380	39,915	15,773			19'-3"	4'-9"					149	
PFI-1236N-2D3DS-K2		187,538	59,840	39,021	15,328			18'-8"	4'-1"					160	
PFI-1236N-2D4ES-K2		176,730	63,450	42,025	16,828			19'-3"	4'-9"					178	
PFI-1236N-2D4ES-M2		221,180	63,820	42,395	17,013			19'-3"	4'-9"					178	
PFI-1236N-2D4ES-N2		237,576	63,880	42,455	17,043			19'-3"	4'-9"					178	
PFI-1236N-3D1DS-L2		215,436	63,720	41,731	16,683			18'-8"	4'-1"					195	
PFI-1236N-3D1DS-O2		268,888	64,000	42,011	16,823			18'-8"	4'-1"					195	
PFI-1236N-3D2DS-M2	(2) 5	228,822	66,040	43,411	17,523	36'-3"	11'-10"	18'-8"	4'-1"	2'-3"	11/2"	4"	610	215	6"
PFI-1236N-3D2ES-P2		275,064	68,830	46,119	18,873			19'-11"	5'-4"					217	
PFI-1236N-3D3DS-L2		200,778	68,130	44,851	18,243			18'-8"	4'-1"					234	
PFI-1236N-3D3ES-O2		241,566	70,780	47,419	19,523			19'-11"	5'-4"					236	
PFI-1236N-3D4DS-M2		214,436	70,900	46,851	19,243			18'-8"	4'-1"					257	
PFI-1236N-3D4DS-N2		229,822	70,960	46,911	19,273			18'-8"	4'-1"					257	
PFI-1236N-3D4DS-P2		266,194	71,380	47,331	19,483			18'-8"	4'-1"					257	
PFI-1236N-3D4ES-M2		207,982	73,340	49,199	20,413			19'-11"	5'-4"					260	
PFI-1236N-4D1ES-O2		248,294	73,550	49,463	20,543			20'-6"	6'-0"					258	
PFI-1236N-4D3DS-P2		258,400	77,410	51,675	21,653			19'-3"	4'-9"					308	

XE Models

Model Number	Pump Motor HP	CFM[2]	Approximate Weight (lbs)			Dimensions					Connection Size[4,7]		Spray Pump (USGPM)	Internal Coil Volume (gal)	Riser Pipe Dia.
			Operating Weight[3]	Shipping Weight	Heaviest Section	L	W	H	F	P	Make-Up Water	Coil			
PFI-1236N-4D3ES-P2		251,540	79,820	54,003	22,813			20-6"	6'-0"					310	
PFI-1236N-4D3ES-Q2		269,648	79,870	54,053	22,838			20-6"	6'-0"					310	
PFI-1236N-4D4DS-M2		202,530	80,410	53,655	22,643			19-3"	4'-9"					339	
PFI-1236N-4D4DS-O2	(2) 5	229,588	80,570	53,815	22,723	36-3"	11'-10"	19-3"	4'-9"	2'-3"	11/2"	4"	610	339	6"
PFI-1236N-4D4DS-P2		250,818	80,890	54,135	22,883			19-3"	4'-9"					339	
PFI-1236N-4D4ES-Q2		262,366	83,440	56,593	24,108			20-6"	6'-0"					341	
PFI-1236N-5D2ES-Q2		270,498	84,710	57,516	24,568			21'-1"	6-6"					352	
PFI-2418N-2D1DS-N2		267,094	57,350	37,395	14,443			19-2"	4'-1"					134	
PFI-2418N-2D2DS-N2		260,166	58,880	38,495	14,993			19-2"	4'-1"					147	
PFI-2418N-2D2ES-M2		231,410	60,520	40,059	15,773			19-9"	4'-9"					149	
PFI-2418N-2D3DS-K2		187,538	59,980	39,165	15,328			19-2"	4'-1"					160	
PFI-2418N-2D4ES-K2		176,730	63,600	42,169	16,828			19-9"	4'-9"					178	
PFI-2418N-2D4ES-M2		221,180	63,970	42,539	17,013			19-9"	4'-9"					178	
PFI-2418N-2D4ES-N2		237,576	64,030	42,599	17,043			19-9"	4'-9"					178	
PFI-2418N-3D1DS-L2		215,436	63,860	41,875	16,683			19-2"	4'-1"					195	
PFI-2418N-3D1DS-O2		268,888	64,140	42,155	16,823			19-2"	4'-1"					195	
PFI-2418N-3D2DS-M2		228,822	66,190	43,555	17,523			19-2"	4'-1"					215	
PFI-2418N-3D2ES-P2		275,064	68,970	46,263	18,873			20-5"	5-4"					217	
PFI-2418N-3D3DS-L2		200,778	68,270	44,995	18,243			19-2"	4'-1"					234	
PFI-2418N-3D3ES-O2	(2) 5	241,566	70,920	47,563	19,523	18'-0"	24'-1"	20-5"	5-4"	2'-3"	1 1/2"	4"	610	236	6"
PFI-2418N-3D4DS-M2		214,436	71,040	46,995	19,243			19-2"	4'-1"					257	
PFI-2418N-3D4DS-N2		229,822	71,100	47,055	19,273			19-2"	4'-1"					257	
PFI-2418N-3D4DS-P2		266,194	71,520	47,475	19,483			19-2"	4'-1"					257	
PFI-2418N-3D4ES-M2		207,982	73,480	49,343	20,413			20-5"	5-4"					260	
PFI-2418N-4D1ES-O2		248,294	73,690	49,607	20,543			21'-0"	6'-0"					258	
PFI-2418N-4D3DS-P2		258,400	77,550	51,819	21,653			19-9"	4'-9"					308	
PFI-2418N-4D3ES-P2		251,540	79,960	54,147	22,813			21'-0"	6'-0"					310	
PFI-2418N-4D3ES-Q2		269,648	80,010	54,197	22,838			21'-0"	6'-0"					310	
PFI-2418N-4D4DS-M2		202,530	80,560	53,799	22,643			19-9"	4'-9"					339	
PFI-2418N-4D4DS-O2		229,588	80,720	53,959	22,723			19-9"	4'-9"					339	
PFI-2418N-4D4DS-P2		250,818	81,040	54,279	22,883			19-9"	4'-9"					339	
PFI-2418N-4D4ES-Q2		262,366	83,590	56,737	24,108			21'-0"	6'-0"					341	
PFI-2418N-5D2ES-Q2		270,498	84,850	57,660	24,568			21'-7"	6-6"					352	

NOTE: For notes on **pages C99 and C100**, see **page C97**.

PFi Engineering Data

PFI HEAT LOSS DATA (BTUH)

Model Number	Standard Unit[1]	Unit with PCD Hood[2]	Unit with PCD Hood and Insulation
PFI-0406N-3D1DZ-G1	106,257	67,291	38,639
PFI-0406N-3D3EZ-H1	125,931	74,510	42,218
PFI-0406N-4D1EZ-H1	133,040	78,191	44,049
PFI-0406N-5D4DZ-J1	166,256	72,991	41,357
PFI-0406N-6D2DZ-J1	169,028	76,763	43,245
PFI-0412N-2D4DZ-G2	180,558	110,696	68,042
PFI-0412N-3D2DZ-H2	199,350	109,760	67,467
PFI-0412N-4D1DZ-H2	221,573	114,891	69,938
PFI-0412N-4D3EZ-H2	259,917	125,223	74,949
PFI-0412N-4D2EZ-J2	249,078	125,856	75,328
PFI-0412N-5D1EZ-J2	265,813	130,256	77,459
PFI-0412N-6D1EZ-J2	296,725	134,518	79,444
PFI-0709N-3D4DS-K1	275,939	133,903	85,728
PFI-0709N-3D2ES-L1	264,521	147,057	92,429
PFI-0709N-3D3ES-M1	277,869	146,495	92,076
PFI-0709N-4D2DS-M1	298,871	139,305	88,336
PFI-0709N-5D2DS-M1	345,586	143,643	90,283
PFI-0709N-5D3ES-L1	378,442	153,813	95,248
PFI-0709N-5D1ES-M1	338,906	155,614	96,363
PFI-0709N-6D1ES-M1	380,470	159,937	98,330
PFI-0718N-2D1DS-J2	345,875	229,459	159,291
PFI-0718N-2D3DS-K2	383,039	227,823	158,155
PFI-0718N-2D3ES-L2	395,508	237,200	162,814
PFI-0718N-2D4ES-M2	413,996	236,350	162,231
PFI-0718N-3D1ES-L2	450,272	244,538	166,092
PFI-0718N-3D4DS-M2	507,287	222,354	154,358
PFI-0718N-4D4DS-L2	614,964	227,118	155,894
PFI-0718N-4D2ES-L2	571,329	248,399	167,059
PFI-0718N-4D2ES-M2	571,329	248,399	167,059
PFI-0718N-5D1ES-M2	620,617	254,256	169,629
PFI-0718N-6D2ES-M2	744,585	257,254	170,134
PFI-1012N-2D2ES-L1	355,641	198,974	126,573
PFI-1012N-2D4ES-N1	393,294	197,575	125,682
PFI-1012N-3D2DS-M1	427,530	187,848	120,606
PFI-1012N-3D4DS-M1	479,029	186,016	119,430
PFI-1012N-3D3DS-N1	456,370	186,822	119,948
PFI-1012N-3D2ES-O1	447,188	204,019	128,671
PFI-1012N-3D4ES-O1	499,218	202,002	127,399
PFI-1012N-4D2ES-N1	533,906	208,990	130,756
PFI-1012N-4D4ES-O1	598,443	206,384	129,125
PFI-1012N-6D1ES-O1	653,521	219,420	135,435

Model Number	Standard Unit[1]	Unit with PCD Hood[2]	Unit with PCD Hood and Insulation
PFI-1212N-2D4ES-M1	462,593	221,417	149,460
PFI-1212N-2D4ES-N1	462,593	221,417	149,460
PFI-1212N-2D4ES-O1	462,593	221,417	149,460
PFI-1212N-3D1DS-M1	476,706	211,631	144,409
PFI-1212N-3D1DS-N1	476,706	211,631	144,409
PFI-1212N-3D2DS-N1	505,708	210,522	143,652
PFI-1212N-3D2DS-O1	505,708	210,522	143,652
PFI-1212N-3D1DS-P1	476,706	211,631	144,409
PFI-1212N-3D3ES-N1	556,329	226,793	151,551
PFI-1212N-3D4ES-O1	590,220	225,383	150,609
PFI-1212N-3D4ES-P1	590,220	225,383	150,609
PFI-1212N-5D1DS-O1	666,878	222,195	148,479
PFI-1212N-4D3DS-P1	646,019	214,095	144,517
PFI-1212N-4D2ES-P1	631,785	232,674	154,021
PFI-1212N-5D4ES-P1	819,314	232,126	152,482
PFI-1212N-6D1ES-P1	773,841	242,991	158,290
PFI-1218N-2D2DS-O1	559,595	283,372	205,574
PFI-1218N-2D4DS-P1	624,470	279,999	203,126
PFI-1218N-2D4ES-P1	640,917	290,586	208,349
PFI-1218N-3D1ES-R1	692,711	299,158	212,148
PFI-1218N-3D2DS-P1	709,633	275,570	199,914
PFI-1218N-3D2DS-Q1	709,633	275,570	199,914
PFI-1218N-3D2ES-R1	734,900	296,784	210,464
PFI-1218N-3D3DS-Q1	750,789	273,430	198,361
PFI-1218N-3D4DS-Q1	799,108	270,918	196,539
PFI-1218N-3D4ES-R1	824,778	291,727	206,878
PFI-1218N-4D2ES-Q1	883,939	299,407	210,139
PFI-1218N-4D2ES-R1	883,939	299,407	210,139
PFI-1218N-4D4ES-R1	994,157	292,968	205,620
PFI-1218N-6D1ES-R1	1,084,223	307,565	212,067
PFI-1218N-6D3ES-R1	1,218,143	299,202	206,301
PFI-1024N-2D2ES-L2	711,283	397,949	253,145
PFI-1024N-2D4ES-N2	786,588	395,150	251,365
PFI-1024N-3D2DS-M2	855,059	375,696	241,212
PFI-1024N-3D4DS-M2	958,059	372,032	238,860
PFI-1024N-3D3DS-N2	912,739	373,644	239,895
PFI-1024N-3D2ES-O2	894,376	408,039	257,342
PFI-1024N-3D4ES-O2	998,437	404,004	254,798
PFI-1024N-4D2ES-N2	1,067,812	417,980	261,512
PFI-1024N-4D4ES-O2	1,196,886	412,768	258,251
PFI-1024N-6D1ES-O2	1,307,041	438,840	270,870
PFI-1224N-2D4ES-M2	925,186	442,834	298,919
PFI-1224N-2D4ES-N2	925,186	442,834	298,919

Model Number	Standard Unit[1]	Unit with PCD Hood[2]	Unit with PCD Hood and Insulation
PFI-1224N-2D4ES-O2	925,186	442,834	298,919
PFI-1224N-3D1DS-M2	953,412	423,262	288,818
PFI-1224N-3D1DS-N2	953,412	423,262	288,818
PFI-1224N-3D2DS-N2	1,011,416	421,044	287,304
PFI-1224N-3D2DS-O2	1,011,416	421,044	287,304
PFI-1224N-3D1DS-P2	953,412	423,262	288,818
PFI-1224N-3D3ES-N2	1,112,658	453,586	303,102
PFI-1224N-3D4ES-O2	1,180,441	450,767	301,219
PFI-1224N-3D4ES-P2	1,180,441	450,767	301,219
PFI-1224N-5D1DS-O2	1,333,756	444,390	296,958
PFI-1224N-4D3DS-P2	1,292,039	428,190	289,034
PFI-1224N-4D2ES-P2	1,263,570	465,348	308,043
PFI-1224N-5D4ES-P2	1,638,627	464,251	304,963
PFI-1224N-6D1ES-P2	1,547,682	485,981	316,580
PFI-2012N-2D2ES-L2	711,283	397,949	253,145
PFI-2012N-2D4ES-N2	786,588	395,150	251,365
PFI-2012N-3D2DS-M2	855,059	375,696	241,212
PFI-2012N-3D4DS-M2	958,059	372,032	238,860
PFI-2012N-3D3DS-N2	912,739	373,644	239,895
PFI-2012N-3D2ES-O2	894,376	408,039	257,342
PFI-2012N-3D4ES-O2	998,437	404,004	254,798
PFI-2012N-4D2ES-N2	1,067,812	417,980	261,512
PFI-2012N-4D4ES-O2	1,196,886	412,768	258,251
PFI-2012N-6D1ES-O2	1,307,041	438,840	270,870
PFI-2412N-2D4ES-M2	925,186	442,834	298,919
PFI-2412N-2D4ES-N2	925,186	442,834	298,919
PFI-2412N-2D4ES-O2	925,186	442,834	298,919
PFI-2412N-3D1DS-M2	953,412	423,262	288,818
PFI-2412N-3D1DS-N2	953,412	423,262	288,818
PFI-2412N-3D2DS-N2	1,011,416	421,044	287,304
PFI-2412N-3D2DS-O2	1,011,416	421,044	287,304
PFI-2412N-3D1DS-P2	953,412	423,262	288,818
PFI-2412N-3D3ES-N2	1,112,658	453,586	303,102
PFI-2412N-3D4ES-O2	1,180,441	450,767	301,219
PFI-2412N-3D4ES-P2	1,180,441	450,767	301,219
PFI-2412N-5D1DS-O2	1,333,756	444,390	296,958
PFI-2412N-4D3DS-P2	1,292,039	428,190	289,034
PFI-2412N-4D2ES-P2	1,263,570	465,348	308,043
PFI-2412N-5D4ES-P2	1,638,627	464,251	304,963
PFI-2412N-6D1ES-P2	1,547,682	485,981	316,580

XE Models

Model Number	Standard Unit[1]	Unit with PCD Hood[2]	Unit with PCD Hood and Insulation
PFI-1236N-2D2DS-Q2	1,119,191	566,744	411,147
PFI-1236N-2D4DS-P2	1,248,941	559,997	406,253
PFI-1236N-2D4ES-P2	1,281,834	581,171	416,698
PFI-1236N-3D1ES-R2	1,385,422	598,316	424,295
PFI-1236N-3D2DS-P2	1,419,266	551,141	399,828
PFI-1236N-3D2DS-Q2	1,419,266	551,141	399,828
PFI-1236N-3D2ES-R2	1,469,800	593,568	420,928
PFI-1236N-3D3DS-Q2	1,501,578	546,861	396,723
PFI-1236N-3D4DS-Q2	1,598,217	541,836	393,077
PFI-1236N-3D4ES-R2	1,649,555	583,454	413,755
PFI-1236N-4D2ES-Q2	1,767,877	598,814	420,278
PFI-1236N-4D2ES-R2	1,767,877	598,814	420,278
PFI-1236N-4D4ES-R2	1,988,314	585,937	411,240
PFI-1236N-6D1ES-R2	2,168,445	615,130	424,135
PFI-1236N-6D3ES-R2	2,436,287	598,404	412,602
PFI-2418N-2D2DS-Q2	1,119,191	566,744	411,147
PFI-2418N-2D4DS-P2	1,248,941	559,997	406,253
PFI-2418N-2D4ES-P2	1,281,834	581,171	416,698
PFI-2418N-3D1ES-R2	1,385,422	598,316	424,295
PFI-2418N-3D2DS-P2	1,419,266	551,141	399,828
PFI-2418N-3D2DS-Q2	1,419,266	551,141	399,828
PFI-2418N-3D2ES-R2	1,469,800	593,568	420,928
PFI-2418N-3D3DS-Q2	1,501,578	546,861	396,723
PFI-2418N-3D4DS-Q2	1,598,217	541,836	393,077
PFI-2418N-3D4ES-R2	1,649,555	583,454	413,755

Model Number (XE Models)	Standard Unit[1]	Unit with PCD Hood[2]	Unit with PCD Hood and Insulation
PFI-2418N-4D2ES-Q2	1,767,877	598,814	420,278
PFI-2418N-4D2ES-R2	1,767,877	598,814	420,278
PFI-2418N-4D4ES-R2	1,988,314	585,937	411,240
PFI-2418N-6D1ES-R2	2,168,445	615,130	424,135
PFI-2418N-6D3ES-R2	2,436,287	598,404	412,602
PFI-0406N-3D1EZ-G1	115,068	74,919	42,450
PFI-0406N-4D2DZ-G1	132,033	70,344	40,110
PFI-0406N-5D1EZ-G1	149,892	80,927	45,383
PFI-0406N-6D2DZ-H1	169,028	76,763	43,245
PFI-0412N-3D1DZ-G2	187,644	110,343	67,826
PFI-0412N-3D2EZ-G2	212,389	121,670	73,413
PFI-0412N-4D1EZ-G2	234,294	126,720	75,844
PFI-0412N-5D3EZ-G2	295,963	128,419	76,367
PFI-0412N-6D1DZ-H2	285,146	123,749	74,067
PFI-0709N-2D3DS-H1	213,645	136,300	87,262
PFI-0709N-3D1DS-H1	236,476	135,422	86,700
PFI-0709N-3D1DS-J1	236,476	135,422	86,700
PFI-0709N-3D1ES-J1	250,959	147,629	92,788
PFI-0709N-3D4ES-J1	291,006	145,942	91,728
PFI-0709N-4D4DS-J1	331,471	137,991	87,503
PFI-0709N-4D3ES-J1	329,877	150,574	93,865
PFI-0709N-4D2ES-K1	313,255	151,305	94,321
PFI-0709N-5D4DS-K1	383,885	142,030	89,269
PFI-0709N-6D1ES-K1	380,470	159,937	98,330
PFI-0709N-6D2ES-L1	403,203	158,860	97,667
PFI-0718N-2D1DS-H2	345,875	229,459	159,291
PFI-0718N-2D4ES-J2	413,996	236,350	162,231
PFI-0718N-3D1DS-H2	429,572	225,775	156,733
PFI-0718N-3D1DS-J2	429,572	225,775	156,733
PFI-0718N-3D2DS-J2	455,917	224,615	155,928
PFI-0718N-3D2DS-K2	455,917	224,615	155,928
PFI-0718N-4D2DS-J2	550,954	230,058	157,912
PFI-0718N-4D3DS-K2	583,313	228,572	156,892
PFI-0718N-6D1DS-J2	681,929	242,890	163,354
PFI-0718N-4D4ES-K2	635,508	245,202	164,909
PFI-0718N-5D1ES-K2	620,617	254,256	169,629
PFI-0718N-5D2ES-K2	659,714	252,243	168,286
PFI-0718N-6D1ES-K2	700,290	259,622	171,700
PFI-0718N-5D1ES-L2	620,617	254,256	169,629
PFI-0718N-6D1ES-L2	700,290	259,622	171,700
PFI-1012N-2D2DS-J1	343,389	190,841	122,528
PFI-1012N-2D4ES-K1	393,294	197,575	125,682
PFI-1012N-3D2DS-K1	427,530	187,848	120,606

Model Number (XE Models)	Standard Unit[1]	Unit with PCD Hood[2]	Unit with PCD Hood and Insulation
PFI-1012N-3D1DS-L1	404,037	188,684	121,143
PFI-1012N-4D1DS-J1	485,219	194,158	123,509
PFI-1012N-3D4DS-L1	479,029	186,016	119,430
PFI-1012N-4D1ES-J1	504,216	210,189	131,506
PFI-1012N-3D2ES-L1	447,188	204,019	128,671
PFI-1012N-3D2ES-M1	447,188	204,019	128,671
PFI-1012N-4D1DS-M1	485,219	194,158	123,509
PFI-1012N-4D3ES-L1	570,140	207,527	129,840
PFI-1012N-4D1ES-M1	504,216	210,189	131,506
PFI-1012N-5D2DS-M1	597,358	198,197	124,999
PFI-1012N-5D2DS-N1	597,358	198,197	124,999
PFI-1012N-4D3ES-N1	570,140	207,527	129,840
PFI-1012N-6D1ES-M1	653,521	219,420	135,435
PFI-1212N-2D4DS-K1	447,839	212,735	145,162
PFI-1212N-3D2DS-K1	505,708	210,522	143,652
PFI-1212N-3D2DS-L1	505,708	210,522	143,652
PFI-1212N-3D4DS-L1	567,773	208,148	142,032
PFI-1212N-3D2ES-L1	527,536	227,990	152,351
PFI-1212N-3D2ES-M1	527,536	227,990	152,351
PFI-1212N-3D4ES-M1	590,220	225,383	150,609
PFI-1212N-4D2DS-M1	610,548	215,511	145,473
PFI-1212N-4D2DS-N1	610,548	215,511	145,473
PFI-1212N-4D3ES-M1	667,474	231,130	152,999
PFI-1212N-6D1DS-M1	754,869	227,348	150,496
PFI-1212N-4D4ES-N1	709,240	229,323	151,803
PFI-1212N-5D4DS-O1	799,370	216,685	144,797
PFI-1212N-5D2ES-N1	729,157	236,158	155,130
PFI-1212N-5D4ES-O1	819,314	232,126	152,482
PFI-1212N-6D1ES-O1	773,841	242,991	158,290
PFI-1218N-2D1DS-N1	529,458	284,939	206,710
PFI-1218N-2D2DS-N1	559,595	283,372	205,574
PFI-1218N-2D2ES-M1	575,281	294,139	210,896
PFI-1218N-2D3DS-K1	589,325	281,826	204,452
PFI-1218N-2D4ES-K1	640,917	290,586	208,349
PFI-1218N-2D4ES-M1	640,917	290,586	208,349
PFI-1218N-2D4ES-N1	640,917	290,586	208,349
PFI-1218N-3D1DS-L1	667,647	277,754	201,498
PFI-1218N-3D1DS-O1	667,647	277,754	201,498
PFI-1218N-3D2DS-M1	709,633	275,570	199,914
PFI-1218N-3D2ES-P1	734,900	296,784	210,464
PFI-1218N-3D3DS-L1	750,789	273,430	198,361
PFI-1218N-3D3ES-O1	776,246	294,458	208,814
PFI-1218N-3D4DS-M1	799,108	270,918	196,539

NOTES:

1. Heat Loss based on 50°F (10°C) entering coil water and -10°F (-23.3°C) ambient with 45 MPH wind (fans and pumps off).
2. One inch thick PVC nitrate rubber blend thermal insulation on both the PCD hood and the casing panels surrounding the coil.

PFi Engineering Data

XE Models

Model Number (XE Models)	Standard Unit[1]	Unit with PCD Hood[2]	Unit with PCD Hood and Insulation
PFI-1218N-3D4DS-N1	799,108	270,918	196,539
PFI-1218N-3D4DS-P1	799,108	270,918	196,539
PFI-1218N-3D4ES-M1	824,778	291,727	206,878
PFI-1218N-4D1ES-O1	831,698	302,459	212,281
PFI-1218N-4D3DS-P1	910,327	276,003	197,893
PFI-1218N-4D3ES-P1	934,824	296,435	208,052
PFI-1218N-4D3ES-Q1	934,824	296,435	208,052
PFI-1218N-4D4DS-M1	969,557	272,797	195,594
PFI-1218N-4D4DS-O1	969,557	272,797	195,594
PFI-1218N-4D4DS-P1	969,557	272,797	195,594
PFI-1218N-4D4ES-Q1	994,157	292,968	205,620
PFI-1218N-5D2ES-Q1	1,021,985	300,661	209,237
PFI-1024N-2D2DS-J2	686,778	381,681	245,055
PFI-1024N-2D4ES-K2	786,588	395,150	251,365
PFI-1024N-3D2DS-K2	855,059	375,696	241,212
PFI-1024N-3D1DS-L2	808,073	377,367	242,285
PFI-1024N-4D1DS-J2	970,438	388,316	247,018
PFI-1024N-3D4DS-L2	958,059	372,032	238,860
PFI-1024N-4D1ES-J2	1,008,431	420,378	263,012
PFI-1024N-3D2ES-L2	894,376	408,039	257,342
PFI-1024N-3D2ES-M2	894,376	408,039	257,342
PFI-1024N-4D1DS-M2	970,438	388,316	247,018
PFI-1024N-4D3ES-L2	1,140,280	415,054	259,681
PFI-1024N-4D1ES-M2	1,008,431	420,378	263,012
PFI-1024N-5D2DS-M2	1,194,716	396,393	249,998
PFI-1024N-5D2DS-N2	1,194,716	396,393	249,998
PFI-1024N-4D3ES-N2	1,140,280	415,054	259,681
PFI-1024N-6D1ES-M2	1,307,041	438,840	270,870
PFI-1224N-2D4DS-K2	895,677	425,471	290,325
PFI-1224N-3D2DS-K2	1,011,416	421,044	287,304
PFI-1224N-3D2DS-L2	1,011,416	421,044	287,304
PFI-1224N-3D4DS-L2	1,135,545	416,296	284,064
PFI-1224N-3D2ES-L2	1,055,072	455,981	304,703
PFI-1224N-3D2ES-M2	1,055,072	455,981	304,703
PFI-1224N-3D4ES-M2	1,180,441	450,767	301,219
PFI-1224N-4D2DS-M2	1,221,097	431,022	290,946
PFI-1224N-4D2DS-N2	1,221,097	431,022	290,946
PFI-1224N-4D3ES-M2	1,334,949	462,259	305,999
PFI-1224N-6D1DS-M2	1,509,739	454,696	300,992
PFI-1224N-4D4ES-N2	1,418,480	458,645	303,606
PFI-1224N-5D4DS-O2	1,598,741	433,369	289,593
PFI-1224N-5D2ES-N2	1,458,313	472,316	310,261
PFI-1224N-5D4ES-O2	1,638,627	464,251	304,963

Model Number (XE Models)	Standard Unit[1]	Unit with PCD Hood[2]	Unit with PCD Hood and Insulation
PFI-1224N-6D1ES-O2	1,547,682	485,981	316,580
PFI-2012N-2D2DS-J2	686,778	381,681	245,055
PFI-2012N-2D4ES-K2	786,588	395,150	251,365
PFI-2012N-3D2DS-K2	855,059	375,696	241,212
PFI-2012N-3D1DS-L2	808,073	377,367	242,285
PFI-2012N-4D1DS-J2	970,438	388,316	247,018
PFI-2012N-3D4DS-L2	958,059	372,032	238,860
PFI-2012N-4D1ES-J2	1,008,431	420,378	263,012
PFI-2012N-3D2ES-L2	894,376	408,039	257,342
PFI-2012N-3D2ES-M2	894,376	408,039	257,342
PFI-2012N-4D1DS-M2	970,438	388,316	247,018
PFI-2012N-4D3ES-L2	1,140,280	415,054	259,681
PFI-2012N-4D1ES-M2	1,008,431	420,378	263,012
PFI-2012N-5D2DS-M2	1,194,716	396,393	249,998
PFI-2012N-5D2DS-N2	1,194,716	396,393	249,998
PFI-2012N-4D3ES-N2	1,140,280	415,054	259,681
PFI-2012N-6D1ES-M2	1,307,041	438,840	270,870
PFI-2412N-2D4DS-K2	895,677	425,471	290,325
PFI-2412N-3D2DS-K2	1,011,416	421,044	287,304
PFI-2412N-3D2DS-L2	1,011,416	421,044	287,304
PFI-2412N-3D4DS-L2	1,135,545	416,296	284,064
PFI-2412N-3D2ES-L2	1,055,072	455,981	304,703
PFI-2412N-3D2ES-M2	1,055,072	455,981	304,703
PFI-2412N-3D4ES-M2	1,180,441	450,767	301,219
PFI-2412N-4D2DS-M2	1,221,097	431,022	290,946
PFI-2412N-4D2DS-N2	1,221,097	431,022	290,946
PFI-2412N-4D3ES-M2	1,334,949	462,259	305,999
PFI-2412N-6D1DS-M2	1,509,739	454,696	300,992
PFI-2412N-4D4ES-N2	1,418,480	458,645	303,606
PFI-2412N-5D4DS-O2	1,598,741	433,369	289,593
PFI-2412N-5D2ES-N2	1,458,313	472,316	310,261
PFI-2412N-5D4ES-O2	1,638,627	464,251	304,963
PFI-2412N-6D1ES-O2	1,547,682	485,981	316,580
PFI-1236N-2D1DS-N2	1,058,915	569,878	413,421
PFI-1236N-2D2DS-N2	1,119,191	566,744	411,147
PFI-1236N-2D2ES-M2	1,150,561	588,277	421,792
PFI-1236N-2D3DS-K2	1,178,649	563,652	408,904
PFI-1236N-2D4ES-K2	1,281,834	581,171	416,698
PFI-1236N-2D4ES-M2	1,281,834	581,171	416,698
PFI-1236N-2D4ES-N2	1,281,834	581,171	416,698
PFI-1236N-3D1DS-L2	1,335,294	555,507	402,995
PFI-1236N-3D1DS-O2	1,335,294	555,507	402,995
PFI-1236N-3D2DS-M2	1,419,266	551,141	399,828

Model Number (XE Models)	Standard Unit[1]	Unit with PCD Hood[2]	Unit with PCD Hood and Insulation
PFI-1236N-3D2ES-P2	1,469,800	593,568	420,928
PFI-1236N-3D3DS-L2	1,501,578	546,861	396,723
PFI-1236N-3D3ES-O2	1,552,492	588,915	417,629
PFI-1236N-3D4DS-M2	1,598,217	541,836	393,077
PFI-1236N-3D4DS-N2	1,598,217	541,836	393,077
PFI-1236N-3D4DS-P2	1,598,217	541,836	393,077
PFI-1236N-3D4ES-M2	1,649,555	583,454	413,755
PFI-1236N-4D1ES-O2	1,663,396	604,918	424,561
PFI-1236N-4D3DS-P2	1,820,653	552,006	395,786
PFI-1236N-4D3ES-P2	1,869,647	592,869	416,105
PFI-1236N-4D3ES-Q2	1,869,647	592,869	416,105
PFI-1236N-4D4DS-M2	1,939,114	545,594	391,188
PFI-1236N-4D4DS-O2	1,939,114	545,594	391,188
PFI-1236N-4D4DS-P2	1,939,114	545,594	391,188
PFI-1236N-4D4ES-Q2	1,988,314	585,937	411,240
PFI-1236N-5D2ES-Q2	2,043,969	601,322	418,474
PFI-2418N-2D1DS-N2	1,058,915	569,878	413,421
PFI-2418N-2D2DS-N2	1,119,191	566,744	411,147
PFI-2418N-2D2ES-M2	1,150,561	588,277	421,792
PFI-2418N-2D3DS-K2	1,178,649	563,652	408,904
PFI-2418N-2D4ES-K2	1,281,834	581,171	416,698
PFI-2418N-2D4ES-M2	1,281,834	581,171	416,698
PFI-2418N-2D4ES-N2	1,281,834	581,171	416,698
PFI-2418N-3D1DS-L2	1,335,294	555,507	402,995
PFI-2418N-3D1DS-O2	1,335,294	555,507	402,995
PFI-2418N-3D2DS-M2	1,419,266	551,141	399,828
PFI-2418N-3D2ES-P2	1,469,800	593,568	420,928
PFI-2418N-3D3DS-L2	1,501,578	546,861	396,723
PFI-2418N-3D3ES-O2	1,552,492	588,915	417,629
PFI-2418N-3D4DS-M2	1,598,217	541,836	393,077
PFI-2418N-3D4DS-N2	1,598,217	541,836	393,077
PFI-2418N-3D4DS-P2	1,598,217	541,836	393,077
PFI-2418N-3D4ES-M2	1,649,555	583,454	413,755
PFI-2418N-4D1ES-O2	1,663,396	604,918	424,561
PFI-2418N-4D3DS-P2	1,820,653	552,006	395,786
PFI-2418N-4D3ES-P2	1,869,647	592,869	416,105
PFI-2418N-4D3ES-Q2	1,869,647	592,869	416,105
PFI-2418N-4D4DS-M2	1,939,114	545,594	391,188
PFI-2418N-4D4DS-O2	1,939,114	545,594	391,188
PFI-2418N-4D4DS-P2	1,939,114	545,594	391,188
PFI-2418N-4D4ES-Q2	1,988,314	585,937	411,240
PFI-2418N-5D2ES-Q2	2,043,969	601,322	418,474

DIMENSIONAL DATA OF POSITIVE CLOSURE DAMPER HOOD

Model Number	Number of PCD Hoods	Length (L)	Width (W)	Height (Y)	Hood Shipping Weight	Hood Operating Weight[1]
PFI-0406	1	4'-6"	4'-7"	1'-7 3/8"	257	187
PFI-0412	2	4'-6"	4'-7"	1'-7 3/8"	239	374
PFI-0709	1	7'-6"	7'-8"	3'-7 1/4"	718	568
PFI-0718	2	7'-6"	7'-8"	3'-7 1/4"	680	1,135
PFI-1012	1	9'-2 3/4"	8'-11 1/2"	3'-1 7/8"	962	722
PFI-1024	2	9'-2 3/4"	8'-11 1/2"	3'-1 7/8"	962	722
PFI-2012	2	9'-2 3/4"	8'-11 1/2"	3'-1 7/8"	962	722
PFI-1212	1	10'-8 3/4"	10'-5"	3'-3 3/4"	1,199	959
PFI-1224	2	10'-8 3/4"	10'-5"	3'-3 3/4"	1,199	959
PFI-2412	2	10'-8 3/4"	10'-5"	3'-3 3/4"	1,199	959
PFI-1218	2	9'-2 3/4"	8'-11 1/2"	3'-1 7/8"	1,684	1,444
PFI-1236	4	9'-2 3/4"	8'-11 1/2"	3'-1 7/8"	1,684	1,444
PFI-2418	4	9'-2 3/4"	8'-11 1/2"	3'-1 7/8"	1,684	1,444

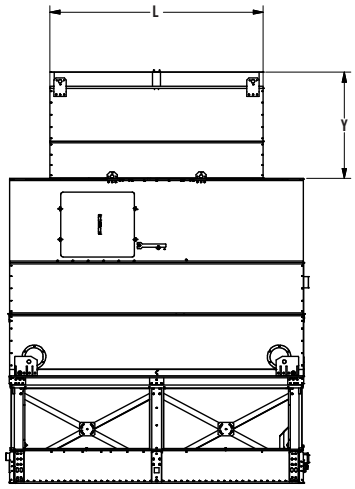

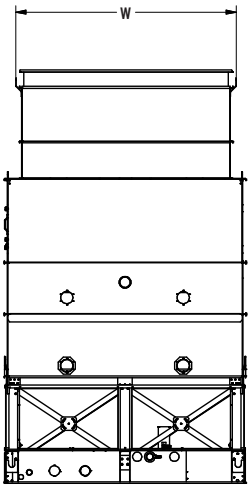

NOTE:

1. Hood shipping weight includes shipping skid weight.
2. Hood dimensions are for units with a standard fan. For alternate fans, please consult your local BAC Representative.

PFi Structural Support

The recommended support arrangement for the PFi Closed Circuit Cooling Tower consists of parallel structural members positioned as shown on the drawing below. In additon to providing adequate support, the members also serve to raise the unit above any solid foundation to ensure access to the bottom of the unit. The PFi Closed Circuit Cooling Tower may also be supported on columns at the anchor bolt locations shown.

To support a PFi Closed Circuit Cooling Tower on columns with an alternate steel support arrangement, or the optional structurally upgraded unit, consult your local BAC Representative.

NOTES:

1. Contact your local BAC Representative for multi-cell or structurally upgraded unit support.
2. Support members and anchor bolts shall be designed, furnished, and installed by others.
3. Design of support members and anchor bolts shall be in accordance with the strength and serviceability requirements of the applicable building code and project specifications.
4. Support members shall be level at the top.
5. Refer to the certified unit support drawing for loading and additional support requirements.
6. If vibration isolation (provided by others) is used, the isolators should be located under a structural base that complies with one of the recommended support arrangements. Contact your local BAC Representative for all other isolator configurations.

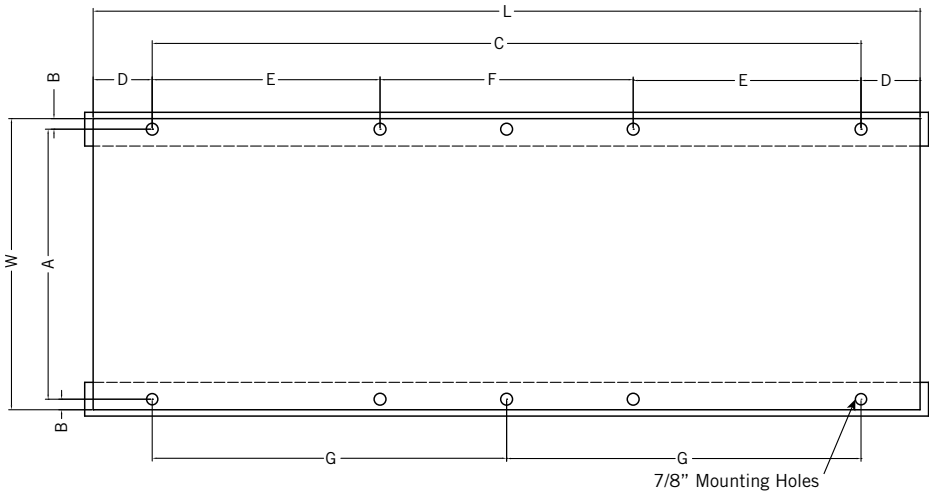

Single Cell Standard Unit Only

SINGLE CELL STANDARD UNIT ONLY

Box Size	L	W	A	B	C	D	E	F	G	Anchor Bolt Qty.
PFI-0406	5'-11 3/4"	4'	3'-9 3/4"	1 1/8"	2'-5 1/4"	9 1/4"	—	—	—	4
PFI-0412	11'-11 3/4"	4'	3'-9 3/4"	1 1/8"	10'-5 1/4"	9 1/4"	—	—	—	4
PFI-0709	8'-11 3/4"	7'-3 1/4"	7'-1"	1 1/8"	8'-3 3/4"	4"	—	—	4'-1 7/8"	6
PFI-0718	17'-11 3/4	7'-3 1/4"	7'-1"	1 1/8"	17'-3 3/4"	4"	5'-8 3/32"	5'-11 1/2"	—	8
PFI-1012	11'-11 3/4"	9' 10"	7'-3 1/4"	1 1/8"	11'-3 3/4"	4"	—	—	5'-7 7/8"	6
PFI-1212	11'-11 3/4"	11'-10"	11'-7 3/4"	1 1/8"	11'-3 3/4"	4"	—	—	5'-7 7/8"	6
PFI-1218	17'-11 3/4	11'-10"	11'-7 3/4"	1 1/8"	17'-3 3/4"	4"	5'-8 3/32"	5'-11 1/2"	—	8

Alternative Structural Support

For replacement installations, the PFi Closed Circuit Cooling Tower has been designed to match the supports of many existing evaporative condensers without modifications. Shown below is the most common support arrangement which can be accommodated by the PFi. If individual point support is required, or if the existing support arrangement is not shown as below, consult your local BAC Representative for assistance.

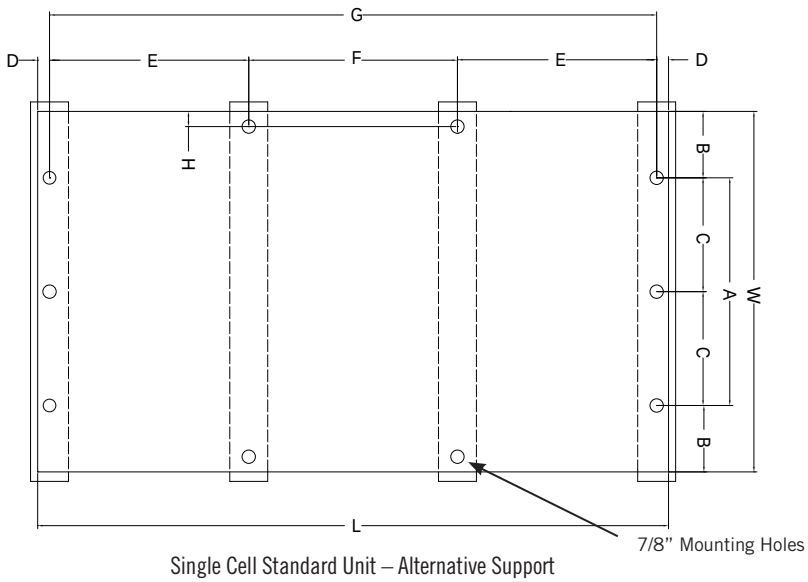

Single Cell Standard Unit – Alternative Support

SINGLE CELL STANDARD UNIT – ALTERNATIVE SUPPORT

Box Size	L	W	A	B	C	D	E	F	G	H	Anchor Bolt Qty.
PFI-0406	5'-11 3/4"	4'-0"	3'-4"	4"	—	1 1/8"	—	—	5'-9 1/2"	—	4
PFI-0412	11'-11-3/4"	4'-0"	3'-4"	4"	—	1 1/8"	—	—	11'-9 1/2"	—	4
PFI-0709	8'-11 3/4"	7'-7 1/4"	6'-7 1/4"	4"	—	1 1/8"	—	—	8'-9 1/2"	—	4
PFI-0718	17'-11 3/4"	7'-7 1/4"	6'-7 1/4"	4"	—	1 1/8"	5'-11"	5'-11 1/2"	17'-9 1/2"	1 1/8"	8
PFI-1012	11'-11 3/4"	9'-0"	9'-2"	4"	4' 7"	1 1/8"	—	—	11'-9 1/2"	—	6
PFI-1212	11'-11 3/4"	11'-10"	11'-2"	4"	5'-7"	1 1/8"	—	—	11'-9 1/2"	—	6
PFI-1218	17'-11 3/4"	11'-10"	11'-2"	4"	5'-7"	1 1/8"	5'-11"	5'-11 1/2"	17'-9 1/2"	1 1/8"	10

NOTES:

1. Contact your local BAC Representative for multi-cell or structurally upgraded unit support.
2. Support members and anchor bolts shall be designed, furnished, and installed by others.
3. Design of support members and anchor bolts shall be in accordance with the strength and serviceability requirements of the applicable building code and project specifications.
4. Support members shall be level at the top.
5. Refer to the certified unit support drawing for loading and additional support requirements.
6. If vibration isolation (provided by others) is used, the isolators should be located under a structural base that complies with one of the recommended support arrangements. Contact your local BAC Representative for all other isolator configurations.