FXV Performance Data

Model Number	Nominal Tons[1]	Fan HP
FXV-0806A-12D-G	29	3
FXV-0806A-12D-H	33	5
FXV-0806A-12D-J	37	7.5
FXV-0806A-12D-K	39	10
FXV-0806A-16D-G	35	3
FXV-0806A-16D-H	40	5
FXV-0806A-16D-J	44	7.5
FXV-0806A-16D-K	47	10
FXV-0806A-20D-G	39	3
FXV-0806A-20D-H	45	5
FXV-0806A-20D-J	50	7.5
FXV-0806A-20D-K	53	10
FXV-0806A-24D-G	44	3
FXV-0806A-24D-H	51	5
FXV-0806A-24D-J	58	7.5
FXV-0806A-24D-K	63	10
FXV-0806B-12D-G	34	3
FXV-0806B-12D-H	38	5
FXV-0806B-12D-J	42	7.5
FXV-0806B-12D-K	44	10
FXV-0806B-12D-L	47	15
FXV-0806B-16D-G	41	3
FXV-0806B-16D-H	46	5
FXV-0806B-16D-J	51	7.5
FXV-0806B-16D-K	54	10
FXV-0806B-16D-L	57	15
FXV-0806B-20D-G	45	3
FXV-0806B-20D-H	52	5
FXV-0806B-20D-J	57	7.5
FXV-0806B-20D-K	61	10
FXV-0806B-20D-L	65	15
FXV-0806B-24D-G	53	3
FXV-0806B-24D-H	61	5
FXV-0806B-24D-J	67	7.5
FXV-0806B-24D-K	72	10
FXV-0806B-24D-L	78	15
FXV-0806B-28D-G	55	3
FXV-0806B-28D-H	64	5
FXV-0806B-28D-J	71	7.5
FXV-0806B-28D-K	77	10
FXV-0806B-28D-L	83	15

Model Number	Nominal Tons[1]	Fan HP
FXV-0806B-32D-G	58	3
FXV-0806B-32D-H	67	5
FXV-0806B-32D-J	75	7.5
FXV-0806B-32D-K	80	10
FXV-0806B-32D-L	87	15
FXV-0806B-36D-G	60	3
FXV-0806B-36D-H	69	5
FXV-0806B-36D-J	77	7.5
FXV-0806B-36D-K	83	10
FXV-0806B-36D-L	90	15
FXV-0809A-12D-G	47	3
FXV-0809A-12D-H	55	5
FXV-0809A-12D-J	61	7.5
FXV-0809A-12D-K	65	10
FXV-0809A-12D-L	72	15
FXV-0809A-16D-G	53	3
FXV-0809A-16D-H	62	5
FXV-0809A-16D-J	69	7.5
FXV-0809A-16D-K	75	10
FXV-0809A-16D-L	83	15
FXV-0809A-20D-G	57	3
FXV-0809A-20D-H	67	5
FXV-0809A-20D-J	75	7.5
FXV-0809A-20D-K	82	10
FXV-0809A-20D-L	91	15
FXV-0809A-24T-G	59	3
FXV-0809A-24T-H	69	5
FXV-0809A-24T-J	79	7.5
FXV-0809A-24T-K	86	10
FXV-0809A-24T-L	97	15
FXV-0809B-16D-G	61	3
FXV-0809B-16D-H	71	5
FXV-0809B-16D-J	79	7.5
FXV-0809B-16D-K	85	10
FXV-0809B-16D-L	94	15
FXV-0809B-16D-M	99	20
FXV-0809B-20D-G	66	3
FXV-0809B-20D-H	77	5
FXV-0809B-20D-J	86	7.5
FXV-0809B-20D-K	93	10
FXV-0809B-20D-L	103	15
FXV-0809B-20D-M	109	20

Model Number	Nominal Tons[1]	Fan HP
FXV-0809B-24D-G	128	3
FXV-0809B-24D-H	74	5
FXV-0809B-24D-J	87	7.5
FXV-0809B-24D-K	98	10
FXV-0809B-24D-L	107	15
FXV-0809B-24D-M	119	20
FXV-0809B-28D-G	76	3
FXV-0809B-28D-H	91	5
FXV-0809B-28D-J	103	7.5
FXV-0809B-28D-K	112	10
FXV-0809B-28D-L	125	15
FXV-0809B-28D-M	135	20
FXV-0809B-32D-G	78	3
FXV-0809B-32D-H	94	5
FXV-0809B-32D-J	106	7.5
FXV-0809B-32D-K	116	10
FXV-0809B-32D-L	130	15
FXV-0809B-32D-M	140	20
FXV-0809B-36D-G	80	3
FXV-0809B-36D-H	95	5
FXV-0809B-36D-J	109	7.5
FXV-0809B-36D-K	119	10
FXV-0809B-36D-L	134	15
FXV-0809B-36D-M	145	20
FXV-0809B-24T-G	69	3
FXV-0809B-24T-H	81	5
FXV-0809B-24T-J	91	7.5
FXV-0809B-24T-K	99	10
FXV-0809B-24T-L	111	15
FXV-0809B-24T-M	119	20
FXV-0809B-30T-G	74	3
FXV-0809B-30T-H	87	5
FXV-0809B-30T-J	99	7.5
FXV-0809B-30T-K	108	10
FXV-0809B-30T-L	120	15
FXV-0809B-30T-M	130	20
FXV-0809B-36T-G	77	3
FXV-0809B-36T-H	91	5
FXV-0809B-36T-J	104	7.5
FXV-0809B-36T-K	113	10
FXV-0809B-36T-L	127	15
FXV-0809B-36T-M	138	20

NOTE: For notes on **pages C29** and **C30**, see **page C33**.

Model Number	Nominal Tons[1]	Fan HP
FXV-0812A-12D-J	83	7.5
FXV-0812A-12D-K	90	10
FXV-0812A-12D-L	101	15
FXV-0812A-12D-M	108	20
FXV-0812A-16D-J	93	7.5
FXV-0812A-16D-K	100	10
FXV-0812A-16D-L	113	15
FXV-0812A-16D-M	122	20
FXV-0812A-20D-J	99	7.5
FXV-0812A-20D-K	109	10
FXV-0812A-20D-L	121	15
FXV-0812A-20D-M	131	20
FXV-0812A-23T-J	101	7.5
FXV-0812A-23T-K	109	10
FXV-0812A-23T-L	122	15
FXV-0812A-23T-M	132	20
FXV-0812A-16Q-J	79	7.5
FXV-0812A-16Q-K	86	10
FXV-0812A-16Q-L	95	15
FXV-0812A-16Q-M	103	20
FXV-0812A-23Q-J	96	7.5
FXV-0812A-23Q-K	104	10
FXV-0812A-23Q-L	116	15
FXV-0812A-23Q-M	125	20
FXV-0812B-12D-J	98	7.5
FXV-0812B-12D-K	105	10
FXV-0812B-12D-L	117	15
FXV-0812B-12D-M	124	20
FXV-0812B-12D-N	129	25
FXV-0812B-12D-O	132	30
FXV-0812B-16D-J	109	7.5
FXV-0812B-16D-K	118	10
FXV-0812B-16D-L	131	15
FXV-0812B-16D-M	140	20
FXV-0812B-16D-N	145	25
FXV-0812B-16D-O	149	30
FXV-0812B-20D-J	117	7.5
FXV-0812B-20D-K	127	10
FXV-0812B-20D-L	141	15
FXV-0812B-20D-M	152	20
FXV-0812B-20D-N	157	25
FXV-0812B-20D-O	163	30

Model Number	Nominal Tons[1]	Fan HP
FXV-0812B-24D-J	130	7.5
FXV-0812B-24D-K	142	10
FXV-0812B-24D-L	161	15
FXV-0812B-28D-J	136	7.5
FXV-0812B-28D-K	148	10
FXV-0812B-24T-J	124	7.5
FXV-0812B-24T-K	136	10
FXV-0812B-24T-L	152	15
FXV-0812B-24T-M	165	20
FXV-0812B-24T-N	171	25
FXV-0812B-24T-O	178	30
FXV-0812B-30T-J	132	7.5
FXV-0812B-30T-K	144	10
FXV-0812B-30T-L	163	15
FXV-0812B-30T-M	177	20
FXV-0812B-30T-N	183	25
FXV-0812B-30T-O	191	30
FXV-0812B-36T-J	137	7.5
FXV-0812B-36T-K	150	10
FXV-0812B-36T-L	171	15
FXV-0812B-36T-M	185	20
FXV-0812B-36T-N	193	25
FXV-0812B-36T-O	201	30
FXV-0812B-16Q-J	93	7.5
FXV-0812B-16Q-K	100	10
FXV-0812B-16Q-L	111	15
FXV-0812B-16Q-M	119	20
FXV-0812B-16Q-N	122	25
FXV-0812B-16Q-O	125	30
FXV-0812B-23Q-J	112	7.5
FXV-0812B-23Q-K	120	10
FXV-0812B-23Q-L	133	15
FXV-0812B-23Q-M	142	20
FXV-0812B-23Q-N	147	25
FXV-0812B-23Q-O	153	30
FXV-0812B-32Q-J	129	7.5
FXV-0812B-32Q-K	142	10
FXV-0812B-32Q-L	160	15
FXV-0812B-32Q-M	174	20
FXV-0812B-32Q-N	180	25
FXV-0812B-32Q-O	187	30

Model Number	Nominal Tons[1]	Fan HP
FXV-0818A-12D-K	147	15
FXV-0818A-12D-L	163	22.5
FXV-0818A-12D-M	173	30
FXV-0818A-16D-K	161	15
FXV-0818A-23T-K	183	15
FXV-0818A-23T-L	203	22.5
FXV-0818A-23T-M	217	30
FXV-0818A-24T-K	185	15
FXV-0818A-24T-L	209	22.5
FXV-0818A-24T-M	226	30
FXV-0818A-16Q-K	144	15
FXV-0818A-16Q-L	160	22.5
FXV-0818A-16Q-M	171	30
FXV-0818A-23Q-K	177	15
FXV-0818A-23Q-L	195	22.5
FXV-0818A-23Q-M	209	30
FXV-0818A-24Q-K	180	15
FXV-0818A-24Q-L	203	22.5
FXV-0818A-24Q-M	218	30
FXV-0818A-32Q-K	192	15
FXV-0818A-32Q-L	218	22.5
FXV-0818A-32Q-M	237	30
FXV-0818A-36H-K	190	15
FXV-0818A-36H-L	214	22.5
FXV-0818A-36H-M	233	30
FXV-0818B-12D-K	167	15
FXV-0818B-12D-L	181	22.5
FXV-0818B-12D-M	194	30
FXV-0818B-12D-N	199	37.5
FXV-0818B-12D-O	206	45
FXV-0818B-24T-K	215	15
FXV-0818B-24T-L	239	22.5
FXV-0818B-24T-M	257	30
FXV-0818B-24T-N	264	37.5
FXV-0818B-24T-O	275	45
FXV-0818B-30T-K	227	15
FXV-0818B-16Q-K	164	15
FXV-0818B-16Q-L	180	22.5
FXV-0818B-16Q-M	191	30
FXV-0818B-16Q-N	197	37.5
FXV-0818B-16Q-O	204	45

FXV Performance Data

Model Number	Nominal Tons[1]	Fan HP
FXV-0818B-24Q-K	207	15
FXV-0818B-24Q-L	230	22.5
FXV-0818B-24Q-M	246	30
FXV-0818B-24Q-N	255	37.5
FXV-0818B-24Q-O	265	45
FXV-0818B-32Q-K	224	15
FXV-0818B-32Q-L	250	22.5
FXV-0818B-32Q-M	267	30
FXV-0818B-32Q-N	276	37.5
FXV-0818B-32Q-O	289	45
FXV-0818B-36H-K	220	15
FXV-0818B-36H-L	245	22.5
FXV-0818B-36H-M	263	30
FXV-0818B-36H-N	272	37.5
FXV-0818B-36H-O	284	45
FXV-1212B-12D-K	123	10
FXV-1212B-12D-M	147	20
FXV-1212B-12D-N	156	25
FXV-1212B-12D-O	163	30
FXV-1212B-16D-K	137	10
FXV-1212B-16D-M	166	20
FXV-1212B-16D-N	176	25
FXV-1212B-16D-O	185	30
FXV-1212B-20D-K	148	10
FXV-1212B-20D-M	180	20
FXV-1212B-20D-N	190	25
FXV-1212B-20D-O	200	30
FXV-1212B-24D-K	163	10
FXV-1212B-24D-M	204	20
FXV-1212B-24D-N	219	25
FXV-1212B-24D-O	230	30
FXV-1212B-28D-K	170	10
FXV-1212B-28D-M	213	20
FXV-1212B-28D-N	228	25
FXV-1212B-28D-O	241	30
FXV-1212B-23T-K	152	10
FXV-1212B-23T-L	169	15
FXV-1212B-23T-M	182	20
FXV-1212B-23T-N	193	25
FXV-1212B-23T-O	201	30
FXV-1212B-24T-K	156	10
FXV-1212B-24T-M	194	20
FXV-1212B-24T-N	207	25
FXV-1212B-24T-O	217	30

Model Number	Nominal Tons[1]	Fan HP
FXV-1212B-23Q-K	145	10
FXV-1212B-23Q-M	173	20
FXV-1212B-23Q-N	183	25
FXV-1212B-23Q-O	191	30
FXV-1212C-12D-K	129	10
FXV-1212C-12D-L	145	15
FXV-1212C-12D-M	155	20
FXV-1212C-12D-N	164	25
FXV-1212C-12D-O	171	30
FXV-1212C-12D-P	184	40
FXV-1212C-16D-K	146	10
FXV-1212C-16D-L	162	15
FXV-1212C-16D-M	175	20
FXV-1212C-16D-N	185	25
FXV-1212C-16D-O	193	30
FXV-1212C-16D-P	208	40
FXV-1212C-20D-L	175	15
FXV-1212C-20D-M	189	20
FXV-1212C-20D-N	200	25
FXV-1212C-20D-O	210	30
FXV-1212C-20D-P	226	40
FXV-1212C-24D-K	176	10
FXV-1212C-24D-L	200	15
FXV-1212C-24D-M	217	20
FXV-1212C-24D-N	232	25
FXV-1212C-24D-O	244	30
FXV-1212C-24D-P	267	40
FXV-1212C-28D-K	183	10
FXV-1212C-28D-L	208	15
FXV-1212C-28D-M	227	20
FXV-1212C-28D-N	242	25
FXV-1212C-28D-O	255	30
FXV-1212C-32D-K	189	10
FXV-1212C-32D-L	215	15
FXV-1212C-32D-M	235	20
FXV-1212C-36D-K	193	10
FXV-1212C-36D-L	221	15
FXV-1212C-23T-K	161	10
FXV-1212C-23T-L	179	15
FXV-1212C-23T-M	192	20
FXV-1212C-23T-N	203	25
FXV-1212C-23T-O	212	30
FXV-1212C-23T-P	229	40

Model Number	Nominal Tons[1]	Fan HP
FXV-1212C-23Q-K	154	10
FXV-1212C-23Q-L	171	15
FXV-1212C-23Q-M	183	20
FXV-1212C-23Q-N	193	25
FXV-1212C-23Q-O	201	30
FXV-1212C-23Q-P	217	40
FXV-1212C-24T-K	168	10
FXV-1212C-24T-L	190	15
FXV-1212C-24T-M	206	20
FXV-1212C-24T-N	220	25
FXV-1212C-24T-O	231	30
FXV-1212C-24T-P	252	40
FXV-1212C-30T-K	178	10
FXV-1212C-30T-L	202	15
FXV-1212C-30T-M	221	20
FXV-1212C-30T-N	235	25
FXV-1212C-30T-O	248	30
FXV-1212C-30T-P	271	40
FXV-1212C-36T-K	186	10
FXV-1212C-36T-L	212	15
FXV-1212C-36T-M	232	20
FXV-1212C-36T-N	247	25
FXV-1212C-36T-O	260	30
FXV-1212C-36T-P	285	40
FXV-1212C-16Q-K	123	10
FXV-1212C-16Q-L	137	15
FXV-1212C-16Q-M	148	20
FXV-1212C-16Q-N	155	25
FXV-1212C-16Q-O	163	30
FXV-1212C-16Q-P	176	40
FXV-1212C-24Q-K	160	10
FXV-1212C-24Q-L	181	15
FXV-1212C-24Q-M	196	20
FXV-1212C-24Q-N	209	25
FXV-1212C-24Q-O	219	30
FXV-1212C-24Q-P	239	40
FXV-1212C-32Q-K	175	10
FXV-1212C-32Q-L	198	15
FXV-1212C-32Q-M	216	20
FXV-1212C-32Q-N	230	25
FXV-1212C-32Q-O	242	30
FXV-1212C-32Q-P	266	40
FXV-1212C-36H-K	169	10
FXV-1212C-36H-L	192	15
FXV-1212C-36H-M	209	20
FXV-1212C-36H-N	223	25
FXV-1212C-36H-O	235	30
FXV-1212C-36H-P	257	40

NOTE: For notes on **pages C31** and **C32**, see **page C33.**

Model Number	Nominal Tons[1]	Fan HP
FXV-1218B-12D-K	198	15
FXV-1218B-12D-L	223	22.5
FXV-1218B-12D-M	241	30
FXV-1218B-12D-N	254	37.5
FXV-1218B-12D-O	267	45
FXV-1218B-16D-K	218	15
FXV-1218B-16D-L	247	22.5
FXV-1218B-16D-M	265	30
FXV-1218B-16D-N	282	37.5
FXV-1218B-20D-K	231	15
FXV-1218B-23T-K	251	15
FXV-1218B-23T-L	280	22.5
FXV-1218B-23T-M	302	30
FXV-1218B-23T-N	324	37.5
FXV-1218B-23T-O	334	45
FXV-1218B-24T-K	248	15
FXV-1218B-24T-L	283	22.5
FXV-1218B-24T-M	311	30
FXV-1218B-24T-N	331	37.5
FXV-1218B-24T-O	347	45
FXV-1218B-16Q-K	196	15
FXV-1218B-16Q-L	219	22.5
FXV-1218B-16Q-M	236	30
FXV-1218B-16Q-N	251	37.5
FXV-1218B-16Q-O	262	45
FXV-1218B-23Q-K	240	15
FXV-1218B-23Q-L	268	22.5
FXV-1218B-23Q-M	288	30
FXV-1218B-23Q-N	309	37.5
FXV-1218B-23Q-O	318	45
FXV-1218B-24Q-K	241	15
FXV-1218B-24Q-L	275	22.5
FXV-1218B-24Q-M	301	30
FXV-1218B-24Q-N	320	37.5
FXV-1218B-24Q-O	335	45
FXV-1218B-36H-K	254	15
FXV-1218B-36H-L	292	22.5
FXV-1218B-36H-M	319	30
FXV-1218B-36H-N	341	37.5
FXV-1218B-36H-O	360	45
FXV-1218C-12D-K	212	15
FXV-1218C-12D-L	235	22.5
FXV-1218C-12D-M	252	30
FXV-1218C-12D-N	266	37.5
FXV-1218C-12D-O	278	45
FXV-1218C-12D-P	301	60
FXV-1218C-16D-K	231	15
FXV-1218C-16D-L	258	22.5
FXV-1218C-16D-M	279	30

Model Number	Nominal Tons[1]	Fan HP
FXV-1218C-20D-K	245	15
FXV-1218C-24T-K	266	15
FXV-1218C-24T-L	316	22.5
FXV-1218C-24T-M	329	30
FXV-1218C-24T-N	351	37.5
FXV-1218C-24T-O	369	45
FXV-1218C-24T-P	403	60
FXV-1218C-30T-K	280	15
FXV-1218C-30T-L	302	22.5
FXV-1218C-30T-M	348	30
FXV-1218C-30T-N	373	37.5
FXV-1218C-30T-O	391	45
FXV-1218C-36T-K	290	15
FXV-1218C-36T-L	333	22.5
FXV-1218C-23Q-K	255	15
FXV-1218C-23Q-L	283	22.5
FXV-1218C-23Q-M	304	30
FXV-1218C-23Q-N	325	37.5
FXV-1218C-23Q-O	334	45
FXV-1218C-23Q-P	362	60
FXV-1218C-16Q-K	207	15
FXV-1218C-16Q-L	231	22.5
FXV-1218C-16Q-M	249	30
FXV-1218C-16Q-N	262	37.5
FXV-1218C-16Q-O	275	45
FXV-1218C-16Q-P	296	60
FXV-1218C-23Q-K	255	15
FXV-1218C-23Q-L	283	22.5
FXV-1218C-23Q-M	304	30
FXV-1218C-23Q-N	325	37.5
FXV-1218C-23Q-O	334	45
FXV-1218C-23Q-P	362	60
FXV-1218C-24Q-K	258	15
FXV-1218C-24Q-L	293	22.5
FXV-1218C-24Q-M	318	30
FXV-1218C-24Q-N	338	37.5
FXV-1218C-24Q-O	359	45
FXV-1218C-24Q-P	388	60
FXV-1218C-32Q-K	277	15
FXV-1218C-32Q-L	316	22.5
FXV-1218C-32Q-M	344	30
FXV-1218C-32Q-N	367	37.5
FXV-1218C-32Q-O	387	45
FXV-1218C-32Q-P	424	60
FXV-1218C-36H-K	273	15
FXV-1218C-32Q-P	424	60
FXV-1218C-32Q-P	424	60
FXV-1218C-32Q-P	424	60
FXV-1218C-32Q-P	424	60
FXV-1218C-32Q-P	424	60

FXV Engineering Data

NOTE: Up-to-date engineering data, free product selection software, and more can be found at **www.BaltimoreAircoil.com.**

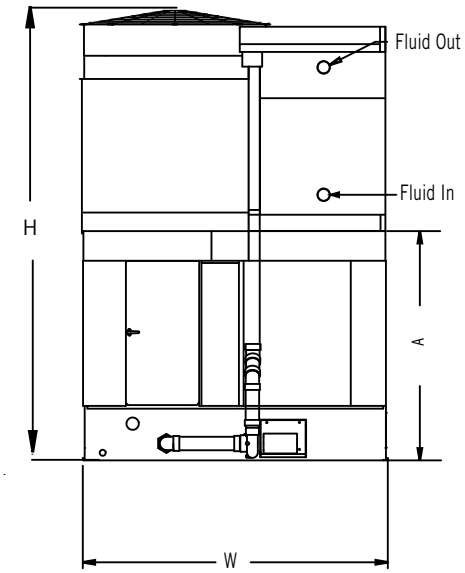

Connection Side:
Models FXV-0806x and FXV-0809x

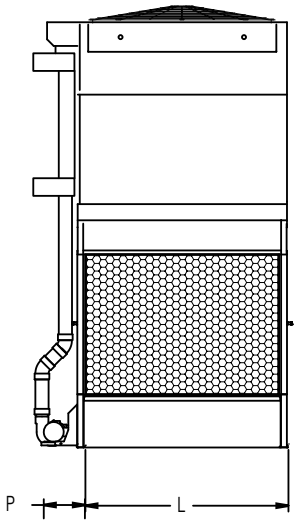

Air Intake End:
Models FXV-0806x

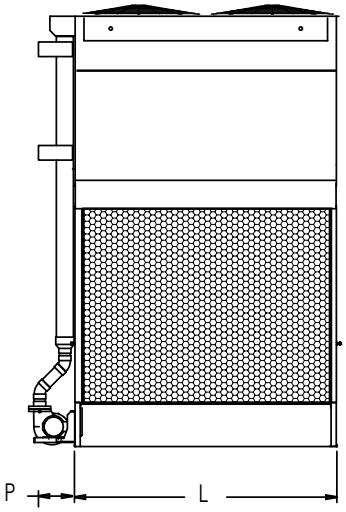

Air Intake End:
Models FXV-0809x

NOTES:

1. Nominal tons of cooling represents 3 USGPM of water cooled from 95°F to 85°F at a 78°F entering wet-bulb temperature.
2. Operating weight is for the unit with the water level in the cold water basin at the overflow.
3. The actual size and number of the coil inlet and outlet connections may vary with the design flow rate. Consult unit print for dimensions.
4. Standard coil inlet and outlet connections are beveled for welding.
5. Models with Whisper Quiet Fans may have heights up to 5 1/2" greater than shown.
6. Standard make-up, drain and overflow connections are located near the bottom of the unit. Make-up connection is 1 1/2" MPT standpipe, drain is 2" FPT, and overflow is 3" FPT. Standard make-up is MPT and standard drain and overflow are FPT.

Do not use for construction. Refer to factory certified dimensions. This catalog includes data current at the time of publication, which should be reconfirmed at the time of purchase.

Model Number	Pump Motor HP	CFM	Approximate Weight (lbs)			Dimensions					Connection Size[3,6]		Spray Pump (USGPM)	Internal Coil Volume (gal)	Riser Pipe Dia.
			Operating Weight[2]	Shipping Weight	Heaviest Section	L	W	H	A	P	Make-Up Water	Coil			
FXV-0806A-12D-x		33,060	7,780	4,890	2,920			12'-7"	6'-5"					44	
FXV-0806A-16D-x		32,400	8,210	5,190	3,210			12'-7"	6'-5"					59	
FXV-0806A-20D-x		31,830	8,630	5,500	3,500			12'-7"	6'-5"					73	
FXV-0806A-24D-x		31,480	9,460	6,200	4,180			15'-5"	6'-5"					88	
FXV-0806B-12D-x		41,970	8,320	5,420	3,000			15'-3"	9'-1"					44	
FXV-0806B-16D-x	2	41,450	8,740	5,730	3,290	6'-0"	8'-6"	15'-3"	9'-1"	1'-6"	1 1/2"	4	290	59	4"
FXV-0806B-20D-x		40,990	9,160	6,030	3,580			15'-3"	9'-1"					73	
FXV-0806B-24D-x		40,590	9,990	6,740	4,250			18'-1"	9'-1"					88	
FXV-0806B-28D-x		40,330	10,420	7,040	4,540			18'-1"	9'-1"					103	
FXV-0806B-32D-x		40,390	10,840	7,340	4,830			18'-1"	9'-1"					117	
FXV-0806B-36D-x		39,860	11,270	7,650	5,120			18'-1"	9'-1"					132	
FXV-0809A-12D-x		48,800	11,040	6,610	3,890			12'-5"	6'-5"			4		66	
FXV-0809A-16D-x		47,700	11,670	7,060	4,320			12'-5"	6'-5"			4		88	
FXV-0809A-20D-x		46,860	12,300	7,510	4,740			12'-5"	6'-5"			4		110	
FXV-0809A-24T-x		46,380	13,440	8,470	5,660			15'-3"	6'-5"			6		132	
FXV-0809B-16D-x		58,000	12,260	7,650	4,340			15'-1"	9'-1"			4		88	
FXV-0809B-20D-x		57,350	12,890	8,100	4,770			15'-1"	9'-1"			4		110	
FXV-0809B-24D-x	5	57,160	13,960	8,990	5,610	9'-0"	8'-6"	17'-11"	9'-1"	2'-0"	1 1/2"	4	500	132	6"
FXV-0809B-28D-x		56,670	14,590	9,440	6,040			17'-11"	9'-1"			4		154	
FXV-0809B-32D-x		56,320	15,220	9,880	6,460			17'-11"	9'-1"			4		176	
FXV-0809B-36D-x		56,320	15,850	10,330	6,890			17'-11"	9'-1"			4		197	
FXV-0809B-24T-x		57,030	14,040	9,060	5,680			17'-11"	9'-1"			6		132	
FXV-0809B-30T-x		56,480	14,980	9,730	6,320			17'-11"	9'-1"			6		165	
FXV-0809B-36T-x		55,960	15,920	10,400	6,960			17'-11"	9'-1"			6		197	

FXV Engineering Data

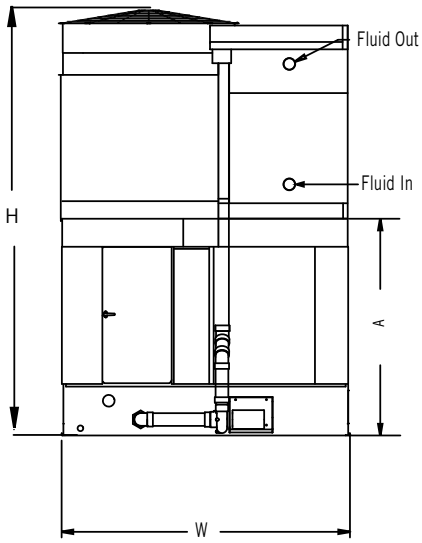

Connection Side:
Models FXV-0812x and FXV-0818x

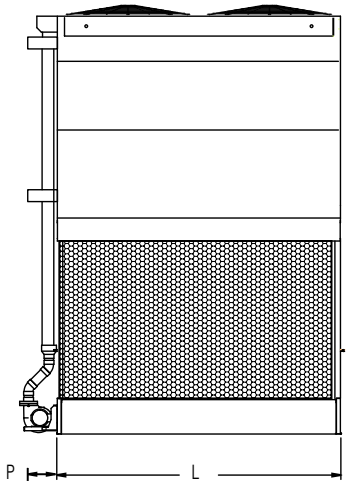

Air Intake End:
Models FXV-0812x

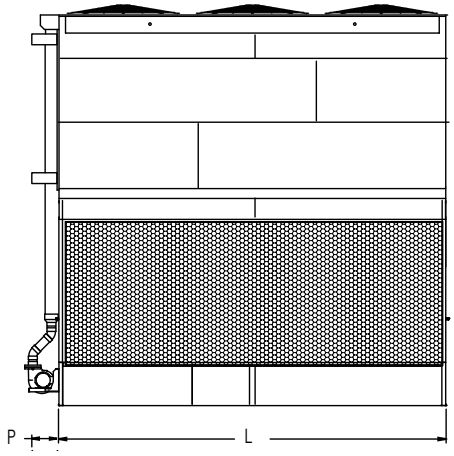

Air Intake End: Models FXV-0818x

NOTES:

1. Nominal tons of cooling represents 3 USGPM of water cooled from 95°F to 85°F at a 78°F entering wet-bulb temperature.
2. Operating weight is for the unit with the water level in the cold water basin at the overflow and a full coil.
3. The actual size and number of the coil inlet and outlet connections may vary with the design flow rate. Consult unit print for dimensions.
4. Standard coil inlet and outlet connections are beveled for welding.
5. Models with Whisper Quiet Fans may have heights up to 5 1/2" greater than shown.
6. Standard make-up, drain and overflow connections are located near the bottom of the unit. Make-up connection is 1 1/2" MPT standpipe, drain is 2" FPT, and overflow is 3" FPT. Standard make-up is MPT and standard drain and overflow are FPT.

Do not use for construction. Refer to factory certified dimensions. This catalog includes data current at the time of publication, which should be reconfirmed at the time of purchase.

Model Number	Pump Motor HP	CFM	Approximate Weight (lbs)			Dimensions					Connection Size[3,6]		Spray Pump (USGPM)	Internal Coil Volume (gal)	Riser Pipe Dia.
			Operating Weight[2]	Shipping Weight	Heaviest Section	L	W	H	A	P	Make-Up Water	Coil			
FXV-0812A-12D-x	5	66,780	13,990	8,030	4,680	12'-0"	8'-6"	12'-7"	6'-5"	2'-0"	1 1/2"	4	719	88	6"
FXV-0812A-16D-x		65,470	14,820	8,620	5,250			12'-7"	6'-5"			4		117	
FXV-0812A-20D-x		64,570	15,660	9,210	5,810			12'-7"	6'-5"			4		146	
FXV-0812A-23T-x		63,650	16,560	10,070	7,100			12'-7"	6'5"			4		176	
FXV-0812A-16Q-x		65,530	14,980	8,780	5,400			12'-7"	6'-5"			6		117	
FXV-0812A-23Q-x		63,550	16,510	10,030	7,060			12'7"	6'5"			4		176	
FXV-0812B-12D-x		84,850	14,730	8,770	4,760			15'-3"	9'-1"			4		88	
FXV-0812B-16D-x		83,810	15,560	9,360	5,320			15'-3"	9'-1"			4		117	
FXV-0812B-20D-x		82,730	16,400	9,950	5,890			15'-3"	9'-1"			4		146	
FXV-0812B-24D-x		65,270	17,610	10,910	6,810			18'-1"	9'-1"			4		176	
FXV-0812B-28D-x		57,020	18,360	11,420	7,290			18'-1"	9'-1"			4		205	
FXV-0812B-24T-x		81,970	17,810	11,120	7,000			18'-1"	9'-1"			6		176	
FXV-0812B-30T-x		81,060	19,060	12,000	7,840			18'-1"	9'-1"			6		219	
FXV-0812B-36T-x		80,520	20,310	12,890	8,690			18'-1"	9'-1"			6		263	
FXV-0812B-16Q-x		83,470	15,720	9,520	5,480			15'-3"	9'-1"			6		117	
FXV-0812B-23Q-x		81,950	17,240	10,750	7,170			15'-3"	9'-1"			4		176	
FXV-0812B-24Q-x		81,960	17,860	11,170	7,050			18'-1"	9'-1"			6		176	
FXV-0812B-32Q-x		80,790	19,530	12,350	8,170			18'-1"	9'-1"			6		234	
FXV-0818A-12D-x	7.5	101,860	20,650	11,610	6,810	18'-0"	8'-6"	13'-1"	6'-11"	2'-0"	1 1/2"	4	859	132	6"
FXV-0818A-16D-x		80,850	21,810	12,410	7,570			13'-1"	6'-11"			4		176	
FXV-0818A-23T-x		97,180	24,520	14,700	10,110			13'-1"	6'-11"			4		263	
FXV-0818A-24T-x		97,190	25,280	15,150	10,180			15'-11"	6'-11"			6		263	
FXV-0818A-16Q-x		99,900	22,130	12,730	7,870			13'-1"	6'-11"			6		176	
FXV-0818A-23Q-x		97,180	24,470	14,650	10,060			13'-1"	6'-11"			4		263	
FXV-0818A-24Q-x		97,180	25,340	15,210	10,230			15'-11"	6'-11"			6		263	
FXV-0818A-32Q-x		95,160	27,960	17,100	12,030			15'-11"	6'-11"			6		351	
FXV-0818A-36H-x		94,400	29,390	18,170	13,050			15'-11"	6'-11"			8		394	
FXV-0818B-12D-x		129,370	21,750	12,710	6,960			15'-9"	9'-7"			4		132	
FXV-0818B-24T-x		125,300	26,380	16,250	10,330			18'-7"	9'-7"			6		263	
FXV-0818B-30T-x		86,880	28,040	17,360	11,380			18'-7"	9'-7"			6		329	
FXV-0818B-16Q-x		127,370	23,230	13,830	8,020			15'-9"	9'-7"			6		176	
FXV-0818B-24Q-x		125,220	26,440	16,310	10,390			18'-7"	9'-7"			6		263	
FXV-0818B-32Q-x		123,520	29,060	18,200	12,190			18'-7"	9'-7"			6		351	
FXV-0818B-36H-x		122,770	30,490	19,270	13,200			18'-7"	9'-7"			8		394	

FXV Engineering Data

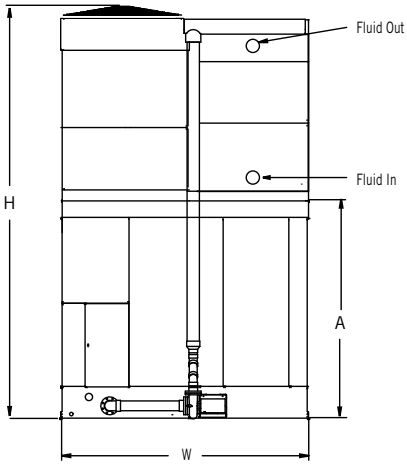

Connection Side:
Models FXV-1212x and FXV-1218x

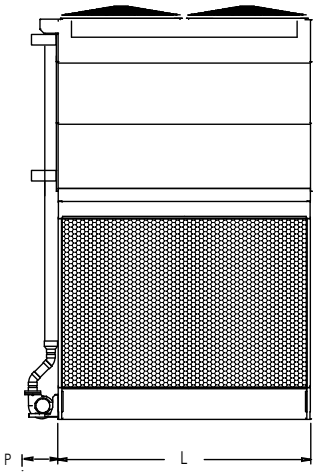

Air Intake End:
Models FXV-1212x

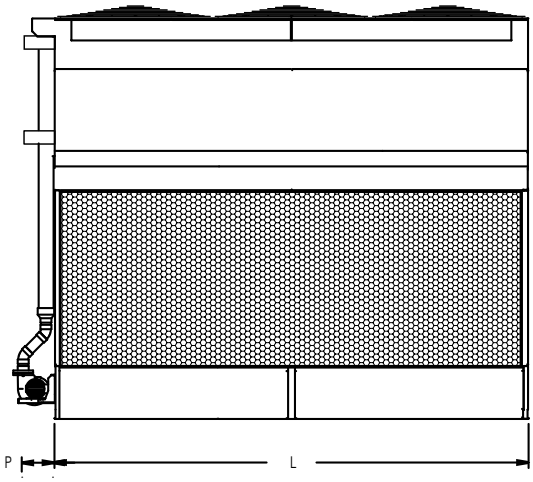

Air Intake End:
Models FXV-1218x

NOTES:

1. Nominal tons of cooling represents 3 USGPM of water cooled from 95°F to 85°F at a 78°F entering wet-bulb temperature.
2. Operating weight is for the unit with the water level in the cold water basin at the overflow and a full coil.
3. The actual size and number of the coil inlet and outlet connections may vary with the design flow rate. Consult unit print for dimensions.
4. Standard coil inlet and outlet connections are beveled for welding.
5. Models with Whisper Quiet Fans may have heights up to 5 1/2" greater than shown.
6. Standard make-up, drain and overflow connections are located near the bottom of the unit. Make-up connection is 1 1/2" MPT standpipe, drain is 2" FPT, and overflow is 3" FPT. Standard make-up is MPT and standard drain and overflow are FPT.

Do not use for construction. Refer to factory certified dimensions. This catalog includes data current at the time of publication, which should be reconfirmed at the time of purchase.

Model Number	Pump Motor HP	CFM	Approximate Weight (lbs)			Dimensions					Connection Size[3,6]		Spray Pump (USGPM)	Internal Coil Volume (gal)	Riser Pipe Dia.
			Operating Weight[2]	Shipping Weight	Heaviest Section	L	W	H	A	P	Make-Up Water	Coil			
FXV-1212B-12D-x		99,040	19,550	10,780	6,280			15'-3"	9'-1"			4		145	
FXV-1212B-16D-x		97,830	20,930	11,760	7,210			15'-3"	9'-1"			4		193	
FXV-1212B-20D-x		96,800	22,300	12,730	8,140			15'-3"	9'-1"			4		241	
FXV-1212B-24D-x		95,710	24,220	14,250	9,580			18'-2"	9'-1"			4		289	
FXV-1212B-28D-x		94,960	25,600	15,220	10,510			18'-2"	9'-1"			4		337	
FXV-1212B-23T-x		95,710	23,820	14,210	9,850			15'-3"	9'-1"			4		289	
FXV-1212B-24T-x		95,720	24,300	14,330	9,660			18'-2"	9'-1"			6		289	
FXV-1212B-23Q-x		95,770	23,770	14,160	9,800			15'-3"	9'-1"			4		289	
FXV-1212C-12D-x		114,030	20,090	11,320	6,570			16'-7"	10'-5"			4		145	
FXV-1212C-16D-x		112,810	21,460	12,290	7,500			16'-7"	10'-5"			4		193	
FXV-1212C-20D-x		111,660	22,840	13,270	8,430			16'-7"	10'-5"			4		241	
FXV-1212C-24D-x	7.5	110,690	24,750	14,780	9,870	12'-0"	11'-10"	19'-6"	10'-5"	2'-0"	1 1/2"	4	859	289	6"
FXV-1212C-28D-x		99,900	25,830	15,460	10,510			19'-6"	10'-5"			4		337	
FXV-1212C-32D-x		86,670	27,120	16,350	11,360			19'-6"	10'-5"			4		385	
FXV-1212C-36D-x		78,750	28,470	17,300	12,270			19'-6"	10'-5"			4		433	
FXV-1212C-23T-x		110,620	24,340	14,730	10,010			16'-7"	10'-5"			4		289	
FXV-1212C-24T-x		110,630	24,830	14,860	9,940			19'-6"	10'-5"			6		289	
FXV-1212C-30T-x		109,460	26,890	16,320	11,330			19'-6"	10'-5"			6		361	
FXV-1212C-36T-x		108,390	28,950	17,770	12,720			19'-6"	10'-5"			6		433	
FXV-1212C-16Q-x		112,530	21,630	12,460	7,660			16'-7"	10'-5"			6		193	
FXV-1212C-23Q-x		110,670	24,290	14,680	9,960			16'-7"	10'-5"			4		289	
FXV-1212C-24Q-x		110,670	24,920	14,950	10,030			19'-6"	10'-5"			6		289	
FXV-1212C-32Q-x		109,040	27,660	16,890	11,880			19'-6"	10'-5"			6		385	
FXV-1212C-36H-x		108,430	29,230	18,060	12,990			19'-6"	10'-5"			8		433	
FXV-1218B-12D-x		149,660	29,430	16,690	10,070			15' 9"	10'-11"			6		217	
FXV-1218B-16D-x		138,870	31,300	17,950	11,330			15' 9"	10'-11"			6		289	
FXV-1218B-20D-x		101,070	32,870	18,920	12,300			15' 9"	10'-11"			6		361	
FXV-1218B-23T-x		144,550	35,640	21,090	14,470			15' 9"	10'-11"			6		433	
FXV-1218B-24T-x		144,550	36,720	22,170	15,550			18' 8"	10'-11"			6		433	
FXV-1218B-16Q-x		147,460	31,660	18,320	11,700			15' 9"	10'-11"			6		289	
FXV-1218B-23Q-x		144,290	35,580	21,040	14,420			15' 9"	10'-11"			6		433	
FXV-1218B-24Q-x		144,290	36,660	22,120	15,500			18' 8"	10'-11"			6		433	
FXV-1218B-36H-x		141,100	42,960	26,610	19,990			18' 8"	10'-11"			6		649	
FXV-1218C-16D-x	10	135,070	31,610	17,720	10,680	18'-0"	11'-10"	17'-1"	10'-11"	2'-6"	1 1/2"	4	1,300	289	8"
FXV-1218C-20D-x		107,210	33,620	19,130	12,020			17'-1"	10'-11"			4		361	
FXV-1218C-24T-x		167,170	37,150	22,070	14,820			20'-0"	10'-11"			6		433	
FXV-1218C-30T-x		150,140	40,070	24,080	16,740			20'-0"	10'-11"			6		541	
FXV-1218C-36T-x		119,170	43,110	26,220	18,770			20'-0"	10'-11"			6		649	
FXV-1218C-16Q-x		170,030	32,280	18,390	11,320			17'-1"	10'-11"			6		289	
FXV-1218C-23Q-x		166,710	36,290	21,750	14,640			15'-9"	10'-11"			6		433	
FXV-1218C-24Q-x		166,720	37,250	22,160	14,910			20'-0"	10'-11"			6		433	
FXV-1218C-32Q-x		164,700	41,570	25,280	17,870			20'-0"	10'-11"			6		577	
FXV-1218C-36H-x		163,340	43,940	27,050	19,560			20'-0"	10'-11"			8		649	

FXV Engineering Data

FXV HEAT LOSS DATA (BTUH)

Model Number	Standard Unit[1]	Unit with PCD Hood[2]	Unit with PCD Hood and Insulation
FXV-0806X-12D	82,000	46,200	34,700
FXV-0806X-16D	97,100	45,900	34,500
FXV-0806X-20D	111,400	45,600	34,200
FXV-0806X-24D	140,200	61,300	44,600
FXV-0806X-28D	153,000	60,900	44,400
FXV-0806X-32D	165,100	60,600	44,100
FXV-0806X-36D	176,700	60,200	43,900
FXV-0809X-12D	118,700	60,400	47,400
FXV-0809X-16D	141,500	59,800	46,900
FXV-0809X-20D	163,000	59,200	46,400
FXV-0809X-24T	205,300	80,700	61,200
FXV-0809X-20D	163,000	59,200	46,400
FXV-0809X-24D	203,100	79,300	60,200
FXV-0809X-28D	222,000	78,600	59,600
FXV-0809X-32D	239,900	77,900	59,100
FXV-0809X-36D	256,800	77,300	58,600
FXV-0809X-24T	205,300	80,700	61,200
FXV-0809X-30T	233,900	79,800	60,500
FXV-0809X-36T	260,400	79,100	60,000
FXV-0812X-12D	154,900	74,300	59,800
FXV-0812X-16D	185,000	73,200	58,900
FXV-0812X-20D	213,400	72,200	58,100
FXV-0812X-24D	264,100	96,500	75,000
FXV-0812X-28D	288,800	95,300	74,100
FXV-0812X-23T	245,300	72,800	58,600
FXV-0812X-24T	267,900	98,700	76,700
FXV-0812X-30T	305,600	97,400	75,600
FXV-0812X-36T	340,300	96,100	74,600
FXV-0812X-16Q	188,700	75,500	60,800
FXV-0812X-23Q	246,700	74,500	60,000
FXV-0812X-24Q	271,700	101,000	78,400
FXV-0812X-32Q	323,100	99,700	77,500

Model Number	Standard Unit[1]	Unit with PCD Hood[2]	Unit with PCD Hood and Insulation
FXV-0818X-12D	225,500	100,900	83,600
FXV-0818X-16D	269,600	98,700	81,800
FXV-0818X-24T	389,200	132,900	106,000
FXV-0818X-30T	443,600	130,200	103,800
FXV-0818X-16Q	277,700	103,500	85,700
FXV-0818X-23Q	363,600	101,400	84,000
FXV-0818X-24Q	397,500	137,500	109,700
FXV-0818X-32Q	472,700	135,000	107,700
FXV-0818X-36H	514,300	137,100	109,300
FXV-1212X-12D	228,300	83,100	70,700
FXV-1212X-16D	277,800	81,700	69,500
FXV-1212X-20D	324,000	80,500	68,500
FXV-1212X-24D	394,300	107,500	86,500
FXV-1212X-28D	434,600	106,000	85,300
FXV-1212X-32D	472,400	104,600	84,200
FXV-1212X-36D	507,900	103,300	83,100
FXV-1212X-23T	378,600	82,200	70,000
FXV-1212X-24T	403,100	111,600	89,800
FXV-1212X-30T	465,700	110,100	88,600
FXV-1212X-36T	523,100	108,800	87,600
FXV-1212X-16Q	283,600	84,600	72,000
FXV-1212X-23Q	378,300	83,400	70,900
FXV-1212X-24Q	406,200	113,000	91,000
FXV-1212X-32Q	489,900	111,500	89,700
FXV-1212X-36H	536,300	113,700	91,500

Model Number	Standard Unit[1]	Unit with PCD Hood[2]	Unit with PCD Hood and Insulation
FXV-1218X-12D	331,900	109,000	97,000
FXV-1218X-16D	404,200	106,400	94,600
FXV-1218X-20D	471,100	103,900	92,500
FXV-1218X-23T	554,100	107,400	95,600
FXV-1218X-24T	586,700	145,800	122,300
FXV-1218X-30T	677,600	143,000	119,900
FXV-1218X-36T	760,500	140,400	117,700
FXV-1218X-16Q	416,900	112,200	99,800
FXV-1218X-23Q	557,100	109,600	97,600
FXV-1218X-24Q	593,400	148,700	124,700
FXV-1218X-32Q	716,100	145,700	122,200
FXV-1218X-36H	789,300	150,100	125,900

NOTES:

1. Heat Loss based on 50°F (10°C) entering coil water and -10°F (-23.3°C) ambient with 45 MPH wind (fans and pumps off).
2. One inch thick PVC nitrate rubber blend thermal insulation on both the PCD hood and the casing panels surrounding the coil.

DIMENSIONAL DATA OF POSITIVE CLOSURE DAMPER HOOD

Model Number	Hood Shipping Weight (lbs)[1]	Hood Operating Weight (lbs)	Length (L)	Width (W)	Height (Y)
FXV-0806	390	320	5'-11 7/8"	3'-5 1/4"	2'-7 1/8"
FXV-0809	540	430	8'-11 7/8"	3'-5 1/4"	
FXV-0812	720	570	11'-11 7/8"	3'-5 1/4"	
FXV-0818	1,475	1,250	17'-11 7/8"	3'-5 1/4"	
FXV-1212	1,160	920	11'-11 7/8"	5'-3 1/2"	
FXV-1218	1,650	1,300	17'-11 7/8"	5'-3 1/2"	

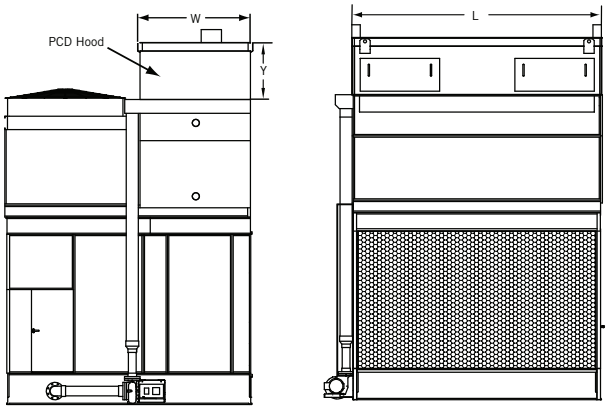

NOTE:

1. Hood shipping weight includes shipping skid weight.

FXV Structural Support

The recommended support arrangement for FXV Closed Circuit Cooling Towers consists of parallel structural members positioned as shown on the drawings. In addition to providing adequate support, the members also serve to raise the unit above any solid foundation to ensure access to the bottom of the tower. To support an FXV on columns or in an alternate arrangement not shown here, consult your local BAC Representative.

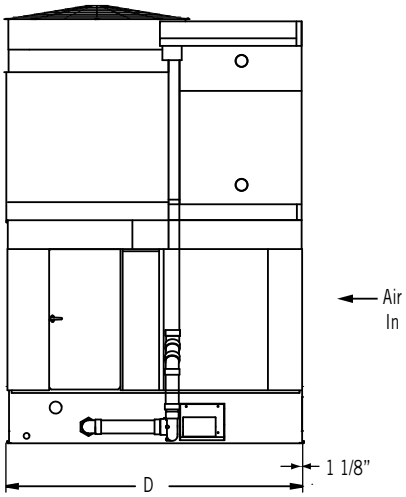

SINGLE AIR INTAKE

Model Number	D
FXV-0806	8'-3 1/2"
FXV-0809	8'-3 1/2"
FXV-0812	8'-3 1/2"
FXV-0818	8'-3 1/2"
FXV-1212	11'-7 3/4"
FXV-1218	11'-7 3/4"

NOTES:

1. Support members and anchor bolts shall be designed, furnished, and installed by others.
2. Design of support members and anchor bolts shall be in accordance with the strength and serviceability requirements of the applicable building code and project specifications.
3. Support members shall be level at the top.
4. Refer to the certified unit support drawing for loading and additional support requirements.
5. If vibration isolation (provided by others) is used, the isolators should be located under a structural base that complies with one of the recommended support arrangements. Contact your local BAC Representative for all other isolator configurations.