PCC Engineering Data

NOTE: Up-to-date engineering data, free product selection software, and more can be found at **www.BaltimoreAircoil.com**.

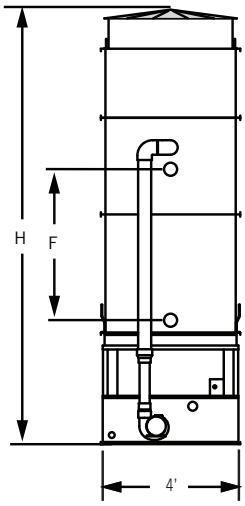

Face A:
PCC 4' x 6' and 4' x 12' Units

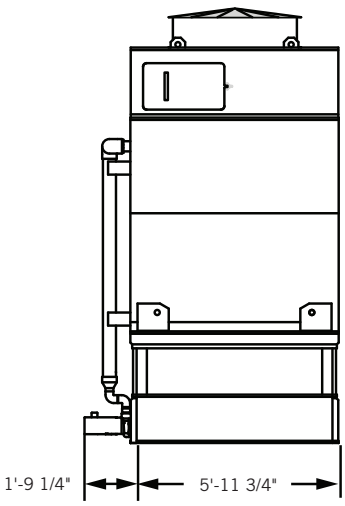

Face D:
PCC 4' x 6' Units

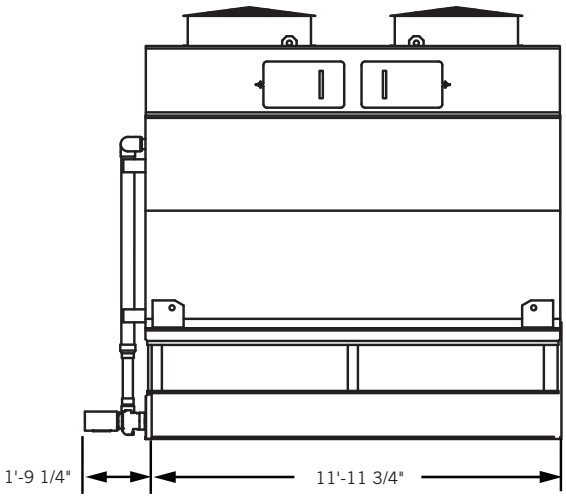

Face D:
PCC 4' x 12' Units

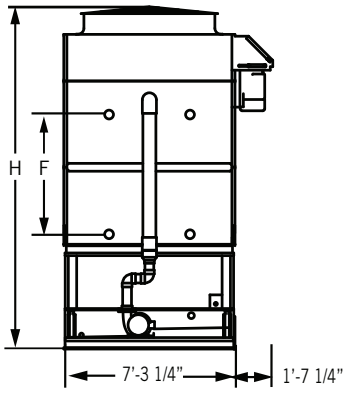

Face A:
PCC 7.4' x 9' and 7.4' x 18' Units

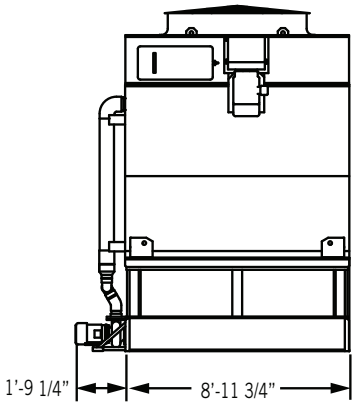

Face D:
PCC 7.4' x 9' Units

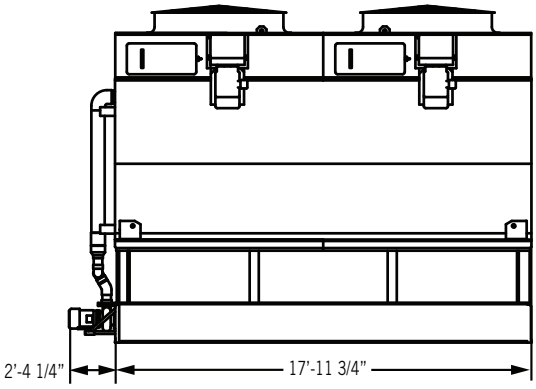

Face D:
PCC 7.4' x 18' Units

Nom. Box Size	Model Number[1]	Base Heat Rejection (MBH)	R-22 Tons[2]	Fan Motor (HP)	Airflow Rate (CFM)	Pump Motor (HP)	Spray Flow Rate (GPM)	Approximate Weight (lbs)			R-717 Operating Charge[4] (lbs)	Internal Coil Volume (ft³)	Remote Sump			F	H
								Ship Weight	Heaviest Section	Oper. Weight[3]			Drain Size[5] (in)	Vol. Req. (gal)	Approx. Oper. Weight (lbs)		
4' x 6'	PCC-0048-0406N005	995	68	5	16,830	1	97	3,270	2,580	4,440	63	7	4	122	3,739	4'-1"	12'-9"
	PCC-0046-0406N003	953	65	3	13,300			3,430	2,740	4,610	74	8			3,909	4'-1"	12'-9"
	PCC-0057-0406N005	1,181	81	5	14,300			3,870	3,180	5,070	95	10			4,369	4'-9"	13'-4"
	PCC-0067-0406N7.5	1,389	95	7.5	15,080			4,610	3,910	5,830	118	13			5,129	6'-6"	15'-2"
4' x 12'	PCC-0078-0412N006	1,617	110	(2) 3	28,690	1.5	197	5,340	4,230	7,640	96	10	6	184	6,194	4'-1"	12'-9"
	PCC-0090-0412N010	1,865	127	(2) 5	33,520			5,380	4,270	7,680	96	10			6,234	4'-1"	12'-9"
	PCC-0106-0412N010	2,197	150	2) 5	30,600			6,040	4,930	8,380	138	15			6,934	4'-1"	12'-9"
	PCC-0122-0412N015	2,529	173	(2) 7.5	33,330			6,810	5,700	9,180	164	18			7,734	4'-9"	13'-4"
	PCC-0128-0412N015	2,653	181	(2) 7.5	32,190			7,090	5,980	9,480	181	20			8,034	4'-9"	13'-4"
	PCC-0118-0412N010	2,446	167	2) 5	27,950			7,580	6,460	9,990	205	22			8,544	6'-6"	15'-2"
	PCC-0134-0412N015	2,777	189	(2) 7.5	30,380			7,880	6,770	10,310	224	24			8,864	5'-4"	14'-0"
7.4' x 9'	PCC-0113-0709N010	2,342	160	10	41,230	2	275	6,890	5,550	10,260	134	14	6	254	8,519	4'-1"	14'-4"
	PCC-0117-0709N7.5	2,425	165	7.5	35,780			7,550	6,210	10,970	177	19			9,229	4'-1"	14'-4"
	PCC-0142-0709N015	2,943	201	15	44,090			7,550	6,210	10,970	177	19			9,229	4'-1"	14'-4"
	PCC-0122-0709N7.5	2,529	173	7.5	34,100			7,790	6,450	11,220	191	21			9,479	4'-1"	14'-4"
	PCC-0154-0709N015	3,192	218	15	40,930			8,710	7,370	12,190	229	25			10,449	4'-9"	14'-11"
	PCC-0160-0709N020	3,316	226	20	47,190			8,450	7,110	11,910	210	23			10,169	4'-9"	14'-11"
	PCC-0166-0709N020	3,441	235	20	50,630			8,770	7,430	12,250	229	25			10,509	4'-9"	14'-11"
	PCC-0175-0709N020	3,627	247	20	42,360			9,500	8,150	12,990	252	27			11,249	6'-0"	16'-2"
	PCC-0130-0709N7.5	2,694	184	7.5	33,140			9,140	7,800	12,640	258	28			10,899	5'-4"	15'-7"
	PCC-0184-0709N020	3,814	260	20	37,830			11,220	9,870	14,820	363	39			13,079	6'-0"	16'-2"
7.4' x 18'	PCC-0177-0718N010	3,669	250	(2) 5	67,270	5	560	12,260	9,550	19,130	252	27	10	366	15,567	4'-1"	15'-0"
	PCC-0214-0718N020	4,435	302	(2) 10	82,950			12,460	9,740	19,330	252	27			15,767	4'-1"	15'-0"
	PCC-0222-0718N015	4,601	314	(2) 7.5	72,150			13,670	10,960	20,630	340	37			17,067	4'-1"	15'-0"
	PCC-0267-0718N030	5,534	377	(2) 15	89,060			14,020	11,300	20,970	340	37			17,407	4'-1"	15'-0"
	PCC-0232-0718N015	4,809	328	(2) 7.5	68,880			14,140	11,430	21,130	369	40			17,567	4'-1"	15'-0"
	PCC-0278-0718N030	5,762	392	(2) 15	87,370			14,960	12,240	21,980	409	44			18,417	4'-9"	15'-8"
	PCC-0300-0718N040	6,218	423	(2) 20	95,370			15,300	12,580	22,320	409	44			18,757	4'-9"	15'-8"
	PCC-0324-0718N020	6,715	457	(2) 10	85,670			16,190	13,470	23,280	485	52			19,717	4'-9"	15'-8"
	PCC-0349-0718N020	7,234	493	(2) 10	62,290			20,370	17,640	27,700	719	78			24,137	6'-0"	16'-11"

NOTES:

1. Model number denotes R-717 capacity in evaporator tons at a 96.3°F condensing temperature, a 20°F suction temperature, and a 78°F entering wet-bulb temperature.
2. R-22 tons are at a 105°F condensing temperature, a 40°F suction temperature, and a 78°F entering wet-bulb temperature.
3. Operating weight is for the unit with the water level at the overflow level and with the coil charged with R-717.
4. The R-22 operating charge is 1.93 times the R-717 charge; R-134a is 1.98 times.
5. Drain size is based on a bottom connection.
6. For R-22 and R-134a, the coil connection quantity may double.
7. Standard make-up, drain, and overflow connections are MPT.
8. Coil inlet and outlet connections are beveled for welding.

Do not use for construction. Refer to factory certified dimensions. This catalog includes data current at the time of publication, which should be reconfirmed at the time of purchase.

PCC Engineering Data

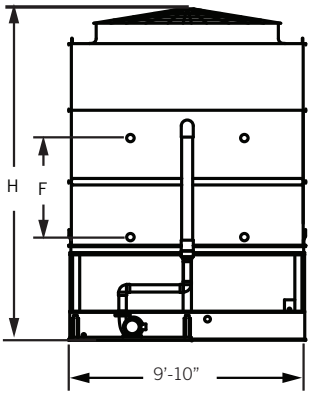

Face A:
PCC 10' x 12' and 10' x 24' Units

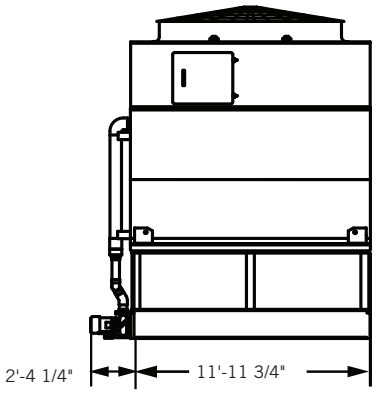

Face D:
PCC 10' x 12' Units

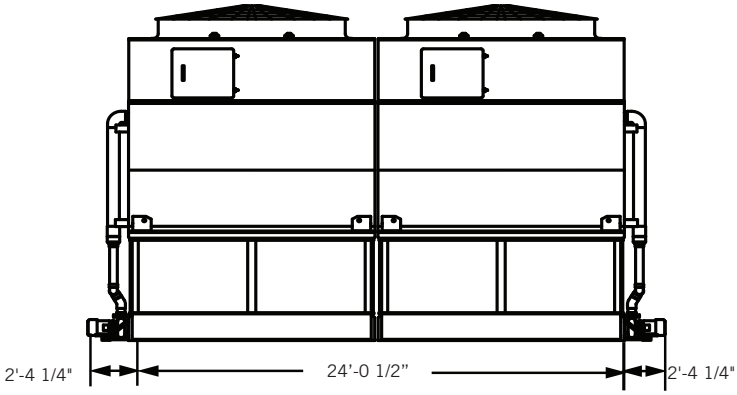

Face D:
PCC 10' x 24' Units

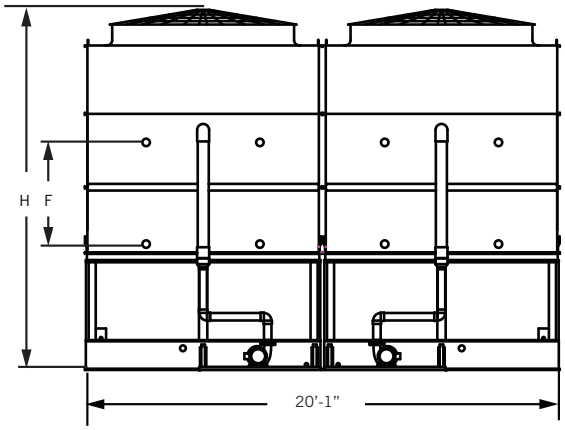

Face A:
PCC 20' x 12' Units

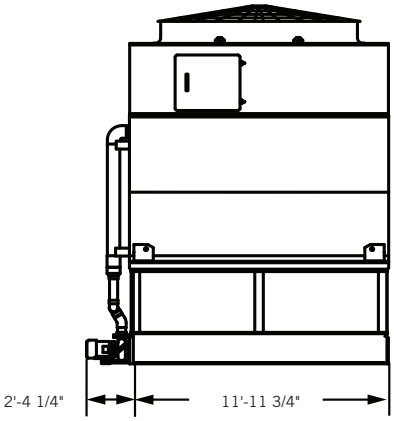

Face D:
PCC 20' x 12' Units

NOTES:

1. Model number denotes R-717 capacity in evaporator tons at a 96.3°F condensing temperature, a 20°F suction temperature, and a 78°F entering wet-bulb temperature.
2. R-22 tons are at a 105°F condensing temperature, a 40°F suction temperature, and a 78°F entering wet-bulb temperature.
3. Operating weight is for the unit with the water level at the overflow level and with the coil charged with R-717.
4. The R-22 operating charge is 1.93 times the R-717 charge; R-134a is 1.98 times.
5. Drain size is based on a bottom connection.
6. For R-22 and R-134a, the coil connection quantity may double.
7. Standard make-up, drain, and overflow connections are MPT.
8. Coil inlet and outlet connections are beveled for welding.

Do not use for construction. Refer to factory certified dimensions. This catalog includes data current at the time of publication, which should be reconfirmed at the time of purchase.

Nom. Box Size	Model Number[1]	Base Heat Rejection (MBH)	R-22 Tons[2]	Fan Motor (HP)	Airflow Rate (CFM)	Pump Motor (HP)	Spray Flow Rate (GPM)	Approximate Weight (lbs)			R-717 Operating Charge[4] (lbs)	Internal Coil Volume (ft³)	Remote Sump			F	H
								Ship Weight	Heaviest Section	Oper. Weight[3]			Drain Size[5] (in)	Vol. Req. (gal)	Approx. Oper. Weight (lbs)		
10' x 12'	PCC-0269-1012N030	5,575	380	30	84,730	5	504	12,600	10,430	18,550	326	35	8	397	15,760	4'-1"	16'-1"
	PCC-0208-1012N010	4,311	294	10	57,960			12,730	10,560	18,710	351	38			15,920	4'-1"	16'-1"
	PCC-0233-1012N015	4,829	329	15	65,370			12,860	10,690	18,840	351	38			16,050	4'-1"	16'-1"
	PCC-0272-1012N020	5,638	384	20	69,900			14,770	12,600	20,830	431	47			18,040	6'-0"	18'-0"
	PCC-0281-1012N025	5,824	397	25	74,850			14,310	12,140	20,370	426	46			17,580	4'-9"	16'-9"
	PCC-0295-1012N030	6,114	416	30	79,010			14,360	12,190	20,420	426	46			17,630	4'-9"	16'-9"
	PCC-0315-1012N040	6,529	445	40	92,880			15,070	12,900	21,160	460	50			18,370	4'-9"	16'-9"
	PCC-0323-1012N030	6,695	456	30	71,050			17,890	15,710	24,140	626	68			21,350	6'-0"	18'-0"
	PCC-0246-1012N010	5,099	347	10	48,420			18,400	16,220	24,700	677	73			21,910	6'-0"	18'-0"
	PCC-0328-1012N030	6,798	463	30	67,200			18,690	16,510	24,990	677	73			22,200	6'-0"	18'-0"
10' x 24'	PCC-0538-1024N060	11,151	759	60	169,460	(2) 5	1,008	25,320	10,430	37,230	652	70	(2) 8	794	34,440	4'-1"	17'-1"
	PCC-0416-1024N020	8,622	587	20	115,920			25,590	10,560	37,550	703	76			34,760	4'-1"	17'-1"
	PCC-0466-1024N030	9,659	658	30	130,740			25,840	10,690	37,800	703	76			35,010	4'-1"	17'-1"
	PCC-0544-1024N040	11,275	768	40	139,790			29,670	12,600	41,790	862	93			39,000	6'-0"	19'-0"
	PCC-0562-1024N050	11,648	793	50	149,690			28,740	12,140	40,860	852	92			38,070	4'-9"	17'-9"
	PCC-0590-1024N060	12,229	832	60	158,020			28,840	12,190	40,960	852	92			38,170	4'-9"	17'-9"
	PCC-0630-1024N080	13,058	889	80	185,750			30,260	12,900	42,440	920	99			39,650	4'-9"	17'-9"
	PCC-0646-1024N060	13,389	911	60	142,100			35,890	15,710	48,400	1,252	135			45,610	6'-0"	19'-0"
	PCC-0492-1024N020	10,197	694	20	96,830			36,920	16,220	49,530	1,353	146			46,740	6'-0"	19'-0"
	PCC-0656-1024N060	13,597	925	60	134,400			37,490	16,510	50,110	1,353	146			47,320	6'-0"	19'-0"
20' x 12'	PCC-0538-2012N060	11,151	759	60	169,460	(2) 5	1,008	25,320	10,430	37,230	652	70	(2) 8	794	34,440	4'-1"	17'-1"
	PCC-0416-2012N020	8,622	587	20	115,920			25,590	10,560	37,550	703	76			34,760	4'-1"	17'-1"
	PCC-0466-2012N030	9,659	658	30	130,740			25,840	10,690	37,800	703	76			35,010	4'-1"	17'-1"
	PCC-0544-2012N040	11,275	768	40	139,790			29,670	12,600	41,790	862	93			39,000	6'-0"	19'-0"
	PCC-0562-2012N050	11,648	793	50	149,690			28,740	12,140	40,860	852	92			38,070	4'-9"	17'-9"
	PCC-0590-2012N060	12,229	832	60	158,020			28,840	12,190	40,960	852	92			38,170	4'-9"	17'-9"
	PCC-0630-2012N080	13,058	889	80	185,750			30,260	12,900	42,440	920	99			39,650	4'-9"	17'-9"
	PCC-0646-2012N060	13,389	911	60	142,100			35,890	15,710	48,400	1,252	135			45,610	6'-0"	19'-0"
	PCC-0492-2012N020	10,197	694	20	96,830			36,920	16,220	49,530	1,353	146			46,740	6'-0"	19'-0"
	PCC-0656-2012N060	13,597	925	60	134,400			37,490	16,510	50,110	1,353	146			47,320	6'-0"	19'-0"

PCC Engineering Data

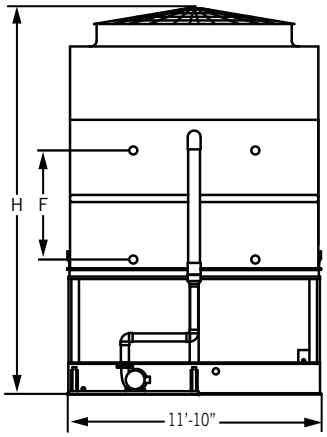

Face A:
PCC 12' x 12', 12' x 18',
and 12' x 20' Units

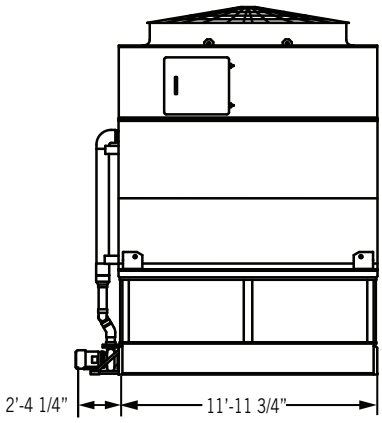

Face D:
PCC 12' x 12' Units

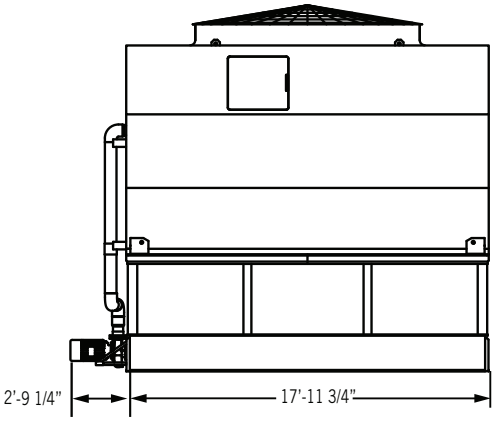

Face D:
PCC 12' x 18' Units

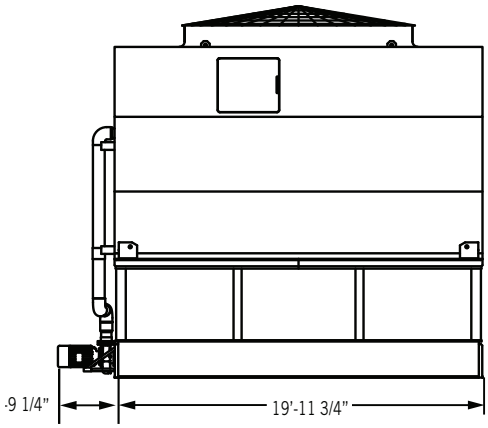

Face D:
PCC 12' x 20' Units

NOTES:

1. Model number denotes R-717 capacity in evaporator tons at a 96.3°F condensing temperature, a 20°F suction temperature, and a 78°F entering wet-bulb temperature.
2. R-22 tons are at a 105°F condensing temperature, a 40°F suction temperature, and a 78°F entering wet-bulb temperature.
3. Operating weight is for the unit with the water level at the overflow level and with the coil charged with R-717.
4. The R-22 operating charge is 1.93 times the R-717 charge; R-134a is 1.98 times.
5. Drain size is based on a bottom connection.
6. For R-22 and R-134a, the coil connection quantity may double.
7. Standard make-up, drain, and overflow connections are MPT.
8. Coil inlet and outlet connections are beveled for welding.

Do not use for construction. Refer to factory certified dimensions. This catalog includes data current at the time of publication, which should be reconfirmed at the time of purchase.

Nom. Box Size	Model Number[1]	Base Heat Rejection (MBH)	R-22 Tons[2]	Fan Motor (HP)	Airflow Rate (CFM)	Pump Motor (HP)	Spray Flow Rate (GPM)	Approximate Weight (lbs)			R-717 Operating Charge[4] (lbs)	Internal Coil Volume (ft³)	Remote Sump			F	H
								Ship Weight	Heaviest Section	Oper. Weight[3]			Drain Size[5] (in)	Vol. Req. (gal)	Approx. Oper. Weight (lbs)		
12' x 12'	PCC-0249-1212N010	5,161	352	10	64,050	5	610	16,780	13,930	23,950	515	56	10	370	20,873	4'-9"	17'-6"
	PCC-0265-1212N015	5,492	374	15	74,840			15,420	12,570	22,510	432	47			19,433	4'-1"	16'-10"
	PCC-0293-1212N015	6,073	414	15	68,750			19,010	16,150	26,300	636	69			23,223	5'-4"	18'-1"
	PCC-0309-1212N020	6,404	436	20	76,340			17,780	14,930	25,000	566	61			21,923	4'-9"	17'-6"
	PCC-0330-1212N025	6,840	466	25	81,540			17,810	14,960	25,030	566	61			21,953	4'-9"	17'-6"
	PCC-0346-1212N025	7,171	488	25	77,040			20,110	17,250	27,460	699	75			24,383	5'-4"	18'-1"
	PCC-0365-1212N030	7,565	515	30	81,470			20,160	17,300	27,510	699	75			24,433	5'-4"	18'-1"
	PCC-0396-1212N040	8,208	559	40	88,740			20,340	17,490	27,700	699	75			24,623	5'-4"	18'-1"
	PCC-0355-1212N025	7,358	501	25	73,440			21,200	18,350	28,670	819	88			25,593	4'-1"	16'-10"
	PCC-0375-1212N030	7,772	529	30	77,630			21,250	18,400	28,720	819	88			25,643	4'-1"	16'-10"
	PCC-0395-1212N040	8,187	557	40	87,990			20,270	17,420	27,670	744	80			24,593	4'-1"	16'-10"
	PCC-0406-1212N040	8,415	573	40	84,480			21,440	18,590	28,910	819	88			25,833	4'-1"	16'-10"
12' x 18'	PCC-0494-1218N040	10,239	697	40	137,590	7.5	921	23,050	18,730	33,750	637	69	12	548	28,558	4'-1"	17'-8"
	PCC-0381-1218N015	7,897	538	15	104,230			23,790	19,470	34,550	699	75			29,358	4'-9"	18'-3"
	PCC-0441-1218N020	9,140	622	20	104,180			26,080	21,760	36,980	839	91			31,788	4'-9"	18'-3"
	PCC-0531-1218N040	11,006	749	40	128,040			26,450	22,130	37,350	839	91			32,158	4'-9"	18'-3"
	PCC-0564-1218N050	11,690	796	50	136,960			26,550	22,240	37,460	839	91			32,268	4'-9"	18'-3"
	PCC-0469-1218N020	9,721	662	20	97,360			29,680	25,360	40,860	1,116	121			35,668	4'-1"	17'-8"
	PCC-0517-1218N030	10,716	729	30	110,020			29,930	25,610	41,110	1,116	121			35,918	4'-1"	17'-8"
	PCC-0541-1218N040	11,213	763	40	127,310			28,570	24,250	39,660	1,022	110			34,468	4'-1"	17'-8"
	PCC-0572-1218N040	11,856	807	40	114,950			31,820	27,500	43,110	1,229	133			37,918	4'-1"	17'-8"
	PCC-0590-1218N050	12,229	832	50	128,050			30,150	25,840	41,330	1,116	121			36,138	4'-1"	17'-8"
	PCC-0609-1218N050	12,622	859	50	122,820			31,920	27,610	43,220	1,229	133			38,028	4'-1"	17'-8"
	PCC-0639-1218N060	13,244	901	60	129,710			32,020	27,710	43,320	1,229	133			38,128	4'-1"	17'-8"
12' x 20'	PCC-0544-1220N040	11,275	766	40	146,578	7.5	1,025	23,837	19,273	35,730	705	76	12	567	24,792	4'-1"	18'-0"
	PCC-0431-1220N015	8,933	607	15	110,836			24,739	20,173	36,700	774	84			25,760	4'-9"	18'-7"
	PCC-0491-1220N020	10,177	692	20	110,257			27,299	22,733	39,420	929	100			28,480	4'-9"	18'-7"
	PCC-0540-1220N030	11,192	761	30	124,950			27,379	22,813	39,500	929	100			28,560	4'-9"	18'-7"
	PCC-0581-1220N040	12,042	818	40	136,270			27,599	23,033	39,720	929	100			28,780	4'-9"	18'-7"
	PCC-0614-1220N050	12,726	865	50	145,849			27,624	23,058	39,740	929	100			28,800	4'-9"	18'-7"
	PCC-0519-1220N020	10,757	731	20	103,393			31,367	26,803	43,800	1,239	134			32,862	4'-1"	18'-0"
	PCC-0557-1220N025	11,545	784	25	105,902			33,367	28,803	45,920	1,365	147			34,982	4'-1"	18'-0"
	PCC-0567-1220N030	11,752	799	30	116,752			31,447	26,883	43,880	1,239	134			32,942	4'-1"	18'-0"
	PCC-0580-1220N030	12,021	817	30	111,884			33,417	28,853	45,970	1,365	147			35,032	4'-1"	18'-0"
	PCC-0591-1220N040	12,249	832	40	135,139			30,027	25,463	42,350	1,134	122			31,412	4'-1"	18'-0"
	PCC-0622-1220N040	12,892	876	40	121,985			33,637	29,073	46,190	1,365	147			35,252	4'-1"	18'-0"
	PCC-0640-1220N050	13,265	901	50	136,206			31,692	27,128	44,120	1,239	134			33,182	4'-1"	18'-0"
	PCC-0659-1220N050	13,659	928	50	130,515			33,662	29,098	46,220	1,365	147			35,282	4'-1"	18'-0"
	PCC-0689-1220N060	14,280	970	60	137,785			33,913	29,349	46,470	1,365	147			35,532	4'-1"	18'-0"

PCC Engineering Data

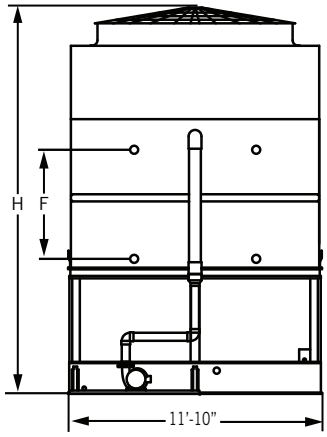

Face A:
PCC 12' x 24', 12' x 36',
and 12' x 40' Units

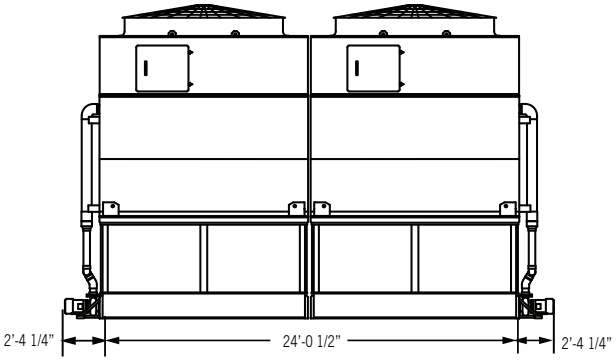

Face D:
PCC 12' x 24' Units

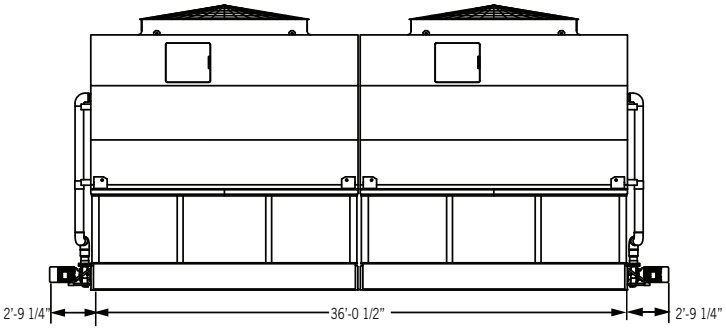

Face D:
PCC 12' x 36' Units

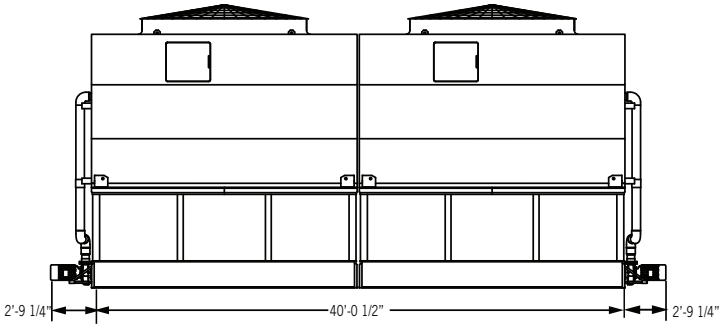

Face D:
PCC 12' x 40' Units

NOTES:

1. Model number denotes R-717 capacity in evaporator tons at a 96.3°F condensing temperature, a 20°F suction temperature, and a 78°F entering wet-bulb temperature.
2. R-22 tons are at a 105°F condensing temperature, a 40°F suction temperature, and a 78°F entering wet-bulb temperature.
3. Operating weight is for the unit with the water level at the overflow level and with the coil charged with R-717.
4. The R-22 operating charge is 1.93 times the R-717 charge; R-134a is 1.98 times.
5. Drain size is based on a bottom connection.
6. For R-22 and R-134a, the coil connection quantity may double.
7. Standard make-up, drain, and overflow connections are MPT.
8. Coil inlet and outlet connections are beveled for welding.

Do not use for construction. Refer to factory certified dimensions. This catalog includes data current at the time of publication, which should be reconfirmed at the time of purchase.

Nom. Box Size	Model Number[1]	Base Heat Rejection (MBH)	R-22 Tons[2]	Fan Motor (HP)	Airflow Rate (CFM)	Pump Motor (HP)	Spray Flow Rate (GPM)	Approximate Weight (lbs)			R-717 Operating Charge[4] (lbs)	Internal Coil Volume (ft³)	Remote Sump			F	H
								Ship Weight	Heaviest Section	Oper. Weight[3]			Drain Size[5] (in)	Vol. Req. (gal)	Approx. Oper. Weight (lbs)		
12' x 24'	PCC-0498-1224N020	10,322	703	20	128,090	(2) 5	1,220	33,680	13,930	48,020	1,030	111	(2) 10	740	44,943	4'-9"	18'-6"
	PCC-0530-1224N030	10,985	748	30	149,670			30,960	12,570	45,140	864	93			42,063	4'-1"	17'-10"
	PCC-0586-1224N030	12,146	827	30	137,500			38,130	16,150	52,710	1,271	137			49,633	5'-4"	19'-1"
	PCC-0618-1224N040	12,809	872	40	152,680			35,690	14,930	50,130	1,131	122			47,053	4'-9"	18'-6"
	PCC-0660-1224N050	13,679	931	50	163,070			35,750	14,960	50,190	1,131	122			47,113	4'-9"	18'-6"
	PCC-0692-1224N050	14,343	976	50	154,070			40,330	17,250	55,040	1,398	151			51,963	5'-4"	19'-1"
	PCC-0730-1224N060	15,130	1,030	60	162,940			40,430	17,300	55,140	1,398	151			52,063	5'-4"	19'-1"
	PCC-0792-1224N080	16,415	1,117	80	177,470			40,810	17,490	55,520	1,398	151			52,443	5'-4"	19'-1"
	PCC-0710-1224N050	14,716	1,002	50	146,880			42,520	18,350	57,470	1,638	177			54,393	4'-1"	17'-10"
	PCC-0750-1224N060	15,545	1,058	60	155,250			42,620	18,400	57,570	1,638	177			54,493	4'-1"	17'-10"
	PCC-0790-1224N080	16,374	1,114	80	175,980			40,660	17,420	55,460	1,489	161			52,383	4'-1"	17'-10"
	PCC-0812-1224N080	16,830	1,145	80	168,960			43,000	18,590	57,950	1,638	177			54,873	4'-1"	17'-10"
12' x 36'	PCC-0980-1236N080	20,315	1,383	80	275,170	(2) 7.5	1,842	46,250	18,730	67,660	1,274	138	(2) 12	1,096	62,468	4'-1"	18'-8"
	PCC-0756-1236N030	15,668	1,066	30	208,450			47,730	19,470	69,270	1,397	151			64,078	4'-9"	19'-3"
	PCC-0875-1236N040	18,135	1,234	40	208,360			52,310	21,760	74,130	1,678	181			68,938	4'-9"	19'-3"
	PCC-1054-1236N080	21,837	1,486	80	256,070			53,050	22,130	74,870	1,678	181			69,678	4'-9"	19'-3"
	PCC-1119-1236N100	23,194	1,578	100	273,910			53,260	22,240	75,080	1,678	181			69,888	4'-9"	19'-3"
	PCC-0931-1236N040	19,287	1,313	40	194,720			59,510	25,360	81,880	2,232	241			76,688	4'-1"	18'-8"
	PCC-1026-1236N060	21,261	1,447	60	220,030			60,010	25,610	82,380	2,232	241			77,188	4'-1"	18'-8"
	PCC-1073-1236N080	22,248	1,514	80	254,620			57,290	24,250	79,470	2,043	221			74,278	4'-1"	18'-8"
	PCC-1135-1236N080	23,523	1,601	80	229,890			63,790	27,500	86,390	2,458	265			81,198	4'-1"	18'-8"
	PCC-1171-1236N100	24,263	1,651	100	256,100			60,460	25,840	82,830	2,232	241			77,638	4'-1"	18'-8"
	PCC-1208-1236N100	25,044	1,704	100	245,640			64,000	27,610	86,600	2,458	265			81,408	4'-1"	18'-8"
	PCC-1268-1236N120	26,278	1,788	120	259,410			64,200	27,710	86,800	2,458	265			81,608	4'-1"	18'-8"
12' x 40'	PCC-1079-1240N080	22,371	1,520	80	293,156	(2) 7.5	2,050	47,856	19,273	71,650	1,410	152	(2) 12	1,096	49,767	4'-1"	19'-0"
	PCC-0855-1240N030	17,724	1,204	30	221,672			49,660	20,173	73,590	1,548	167			51,703	4'-9"	19'-7"
	PCC-0974-1240N040	20,192	1,372	40	220,514			54,780	22,733	79,020	1,859	201			57,133	4'-9"	19'-7"
	PCC-1071-1240N060	22,207	1,509	60	249,900			54,940	22,813	79,180	1,859	201			57,293	4'-9"	19'-7"
	PCC-1153-1240N080	23,893	1,624	80	272,540			55,380	23,033	79,620	1,859	201			57,733	4'-9"	19'-7"
	PCC-1218-1240N100	25,250	1,716	100	291,697			55,430	23,058	79,670	1,859	201			57,783	4'-9"	19'-7"
	PCC-1030-1240N040	21,343	1,450	40	206,787			62,916	26,803	87,780	2,478	268			65,897	4'-1"	19'-0"
	PCC-1105-1240N050	22,906	1,556	50	211,805			66,916	28,803	92,030	2,730	295			70,147	4'-1"	19'-0"
	PCC-1125-1240N060	23,317	1,584	60	233,504			63,076	26,883	87,940	2,478	268			66,057	4'-1"	19'-0"
	PCC-1151-1240N060	23,852	1,621	60	223,768			67,016	28,853	92,130	2,730	295			70,247	4'-1"	19'-0"
	PCC-1173-1240N080	24,304	1,652	80	270,279			60,236	25,463	84,890	2,269	245			63,007	4'-1"	19'-0"
	PCC-1234-1240N080	25,579	1,738	80	243,971			67,456	29,073	92,570	2,730	295			70,687	4'-1"	19'-0"
	PCC-1270-1240N100	26,319	1,788	100	272,412			63,566	27,128	88,430	2,478	268			66,547	4'-1"	19'-0"
	PCC-1308-1240N100	27,100	1,842	100	261,031			67,506	29,098	92,620	2,730	295			70,737	4'-1"	19'-0"
	PCC-1367-1240N120	28,334	1,925	120	275,570			68,008	29,349	93,120	2,730	295			71,237	4'-1"	19'-0"

PCC Engineering Data

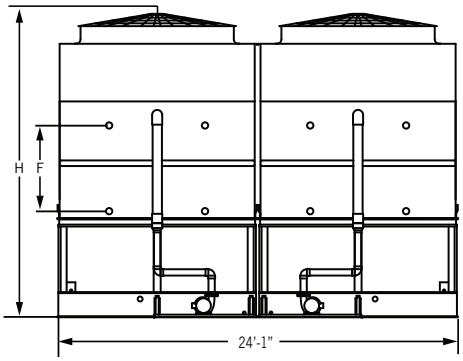

Face A:
PCC 24' x 12, 24' x 18', and 24' x 20' Units

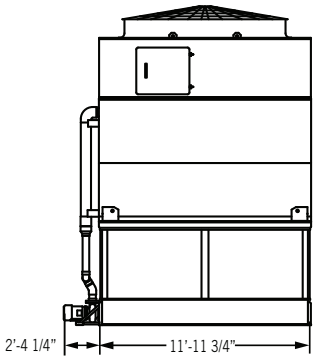

Face D:
PCC 24' x 12' Units

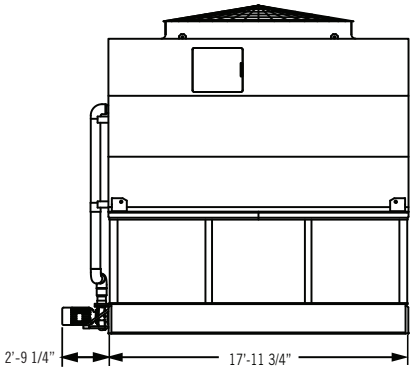

Face D:
PCC 24' x 18' Units

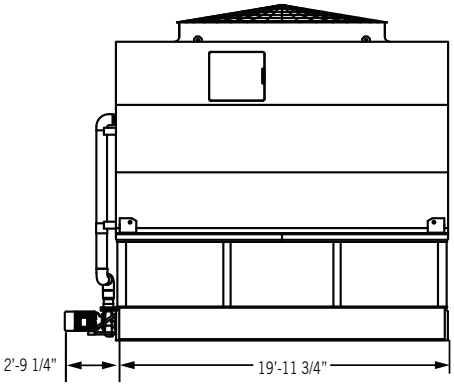

Face D:
PCC 24' x 20' Units

NOTES:

1. Model number denotes R-717 capacity in evaporator tons at a 96.3°F condensing temperature, a 20°F suction temperature, and a 78°F entering wet-bulb temperature.
2. R-22 tons are at a 105°F condensing temperature, a 40°F suction temperature, and a 78°F entering wet-bulb temperature.
3. Operating weight is for the unit with the water level at the overflow level and with the coil charged with R-717.
4. The R-22 operating charge is 1.93 times the R-717 charge; R-134a is 1.98 times.
5. Drain size is based on a bottom connection.
6. For R-22 and R-134a, the coil connection quantity may double.
7. Standard make-up, drain, and overflow connections are MPT.
8. Coil inlet and outlet connections are beveled for welding.

Do not use for construction. Refer to factory certified dimensions. This catalog includes data current at the time of publication, which should be reconfirmed at the time of purchase.

Nom. Box Size	Model Number[1]	Base Heat Rejection (MBH)	R-22 Tons[2]	Fan Motor (HP)	Airflow Rate (CFM)	Pump Motor (HP)	Spray Flow Rate (GPM)	Approximate Weight (lbs)			R-717 Operating Charge[4] (lbs)	Internal Coil Volume (ft³)	Remote Sump			F	H
								Ship Weight	Heaviest Section	Oper. Weight[3]			Drain Size[5] (in)	Vol. Req. (gal)	Approx. Oper. Weight (lbs)		
24' x 12'	PCC-0498-2412N020	10,322	703	20	128,090	(2) 5	1,220	33,680	13,930	48,020	1,030	111	(2) 10	740	44,943	4'-9"	18'-6"
	PCC-0530-2412N030	10,985	748	30	149,670			30,960	12,570	45,140	864	93			42,063	4'-1"	17'-10"
	PCC-0586-2412N030	12,146	827	30	137,500			38,130	16,150	52,710	1,271	137			49,633	5'-4"	19'-1"
	PCC-0618-2412N040	12,809	872	40	152,680			35,690	14,930	50,130	1,131	122			47,053	4'-9"	18'-6"
	PCC-0660-2412N050	13,679	931	50	163,070			35,750	14,960	50,190	1,131	122			47,113	4'-9"	18'-6"
	PCC-0692-2412N050	14,343	976	50	154,070			40,330	17,250	55,040	1,398	151			51,963	5'-4"	19'-1"
	PCC-0730-2412N060	15,130	1,030	60	162,940			40,430	17,300	55,140	1,398	151			52,063	5'-4"	19'-1"
	PCC-0792-2412N080	16,415	1,117	80	177,470			40,810	17,490	55,520	1,398	151			52,443	5'-4"	19'-1"
	PCC-0710-2412N050	14,716	1,002	50	146,880			42,520	18,350	57,470	1,638	177			54,393	4'-1"	17'-10"
	PCC-0750-2412N060	15,545	1,058	60	155,250			42,620	18,400	57,570	1,638	177			54,493	4'-1"	17'-10"
	PCC-0790-2412N080	16,374	1,114	80	175,980			40,660	17,420	55,460	1,489	161			52,383	4'-1"	17'-10"
	PCC-0812-2412N080	16,830	1,145	80	168,960			43,000	18,590	57,950	1,638	177			54,873	4'-1"	17'-10"
24' x 18'	PCC-0988-2418N080	20,478	1,394	80	275,170	(2) 7.5	1,842	46,310	18,730	67,720	1,274	138	(2) 12	1,096	62,528	4'-1"	19'-2"
	PCC-0762-2418N030	15,794	1,075	30	208,450			47,790	19,470	69,330	1,397	151			64,138	4'-9"	19'-9"
	PCC-0882-2418N040	18,281	1,244	40	208,360			52,370	21,760	74,190	1,678	181			68,998	4'-9"	19'-9"
	PCC-1062-2418N080	22,011	1,498	80	256,070			53,110	22,130	74,930	1,678	181			69,738	4'-9"	19'-9"
	PCC-1128-2418N100	23,379	1,591	100	273,910			53,320	22,240	75,130	1,678	181			69,938	4'-9"	19'-9"
	PCC-0938-2418N040	19,441	1,323	40	194,720			59,570	25,360	81,940	2,232	241			76,748	4'-1"	19'-2"
	PCC-1034-2418N060	21,431	1,458	60	220,030			60,070	25,610	82,440	2,232	241			77,248	4'-1"	19'-2"
	PCC-1082-2418N080	22,426	1,526	80	254,620			57,350	24,250	79,530	2,043	221			74,338	4'-1"	19'-2"
	PCC-1144-2418N080	23,711	1,614	80	229,890			63,850	27,500	86,440	2,458	265			81,248	4'-1"	19'-2"
	PCC-1180-2418N100	24,457	1,664	100	256,100			60,510	25,840	82,880	2,232	241			77,688	4'-1"	19'-2"
	PCC-1218-2418N100	25,245	1,718	100	245,640			64,050	27,610	86,650	2,458	265			81,458	4'-1"	19'-2"
	PCC-1278-2418N120	26,488	1,802	120	259,410			64,250	27,710	86,850	2,458	265			81,658	4'-1"	19'-2"
24' x 20'	PCC-1088-2420N080	22,550	1,532	80	293,156	(2) 7.5	2,050	47,897	19,273	71,690	1,410	152	(2)12	1,134	49,804	4'-1"	19'-6"
	PCC-0862-2420N030	17,866	1,214	30	221,672			49,701	20,173	73,630	1,548	167			51,740	4'-9"	20'-1"
	PCC-0982-2420N040	20,353	1,383	40	220,514			54,821	22,733	79,060	1,859	201			57,170	4'-9"	20'-1"
	PCC-1080-2420N060	22,385	1,521	60	249,900			54,981	22,813	79,220	1,859	201			57,330	4'-9"	20'-1"
	PCC-1162-2420N080	24,084	1,637	80	272,540			55,421	23,033	79,660	1,859	201			57,770	4'-9"	20'-1"
	PCC-1228-2420N100	25,452	1,730	100	291,697			55,471	23,058	79,710	1,859	201			57,820	4'-9"	20'-1"
	PCC-1038-2420N040	21,514	1,462	40	206,787			62,957	26,803	87,820	2,478	268			65,934	4'-1"	19'-6"
	PCC-1114-2420N050	23,089	1,569	50	211,805			66,957	28,803	92,070	2,730	295			70,184	4'-1"	19'-6"
	PCC-1134-2420N060	23,504	1,597	60	233,504			63,117	26,883	87,980	2,478	268			66,094	4'-1"	19'-6"
	PCC-1160-2420N060	24,043	1,634	60	223,768			67,057	28,853	92,170	2,730	295			70,284	4'-1"	19'-6"
	PCC-1182-2420N080	24,499	1,665	80	270,279			60,277	25,463	84,930	2,269	245			63,044	4'-1"	19'-6"
	PCC-1244-2420N080	25,784	1,752	80	243,971			67,497	29,073	92,610	2,730	295			70,724	4'-1"	19'-6"
	PCC-1280-2420N100	26,530	1,803	100	272,412			63,607	27,128	88,470	2,478	268			66,584	4'-1"	19'-6"
	PCC-1318-2420N100	27,317	1,856	100	261,031			67,547	29,098	92,660	2,730	295			70,774	4'-1"	19'-6"
	PCC-1378-2420N120	28,561	1,941	120	275,570			68,049	29,349	93,160	2,730	295			71,274	4'-1"	19'-6"

PCC Engineering Data

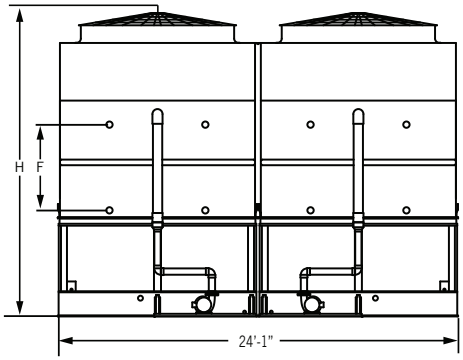

Face A:
PCC 24' x 24', 24' x 36' and 24' x 40' Units

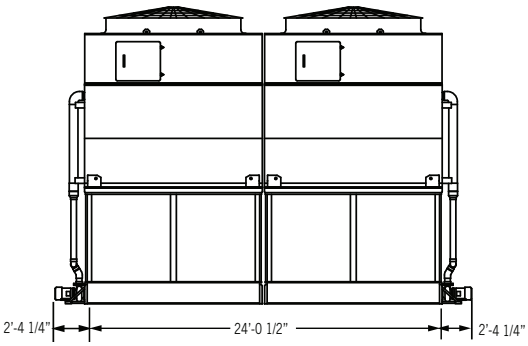

Face D:
PCC 24' x 24' Units

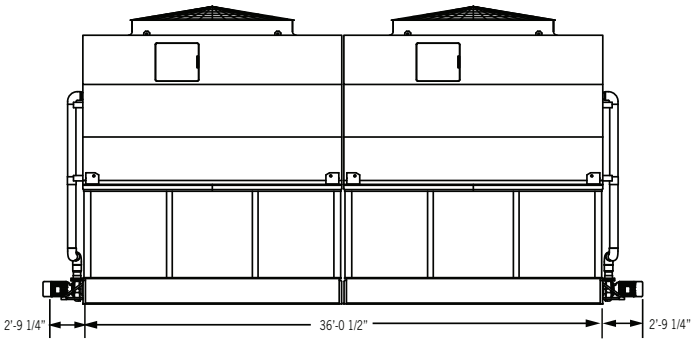

Face D:
PCC 24' x 36' Units

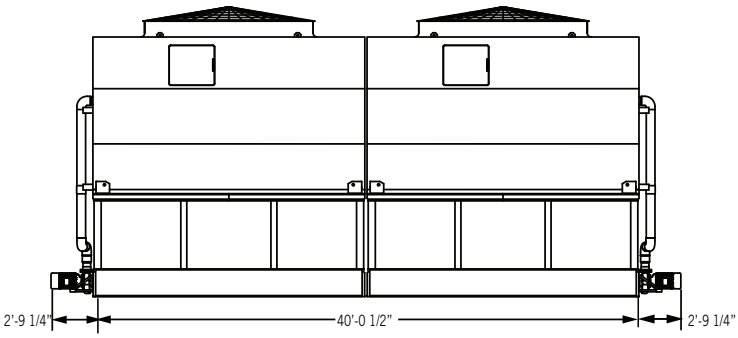

Face D:
PCC 24' x 40' Units

NOTES:

1. Model number denotes R-717 capacity in evaporator tons at a 96.3°F condensing temperature, a 20°F suction temperature, and a 78°F entering wet-bulb temperature.
2. R-22 tons are at a 105°F condensing temperature, a 40°F suction temperature, and a 78°F entering wet-bulb temperature.
3. Operating weight is for the unit with the water level at the overflow level and with the coil charged with R-717.
4. The R-22 operating charge is 1.93 times the R-717 charge; R-134a is 1.98 times.
5. Drain size is based on a bottom connection.
6. For R-22 and R-134a, the coil connection quantity may double.
7. Standard make-up, drain, and overflow connections are MPT.
8. Coil inlet and outlet connections are beveled for welding.

Do not use for construction. Refer to factory certified dimensions. This catalog includes data current at the time of publication, which should be reconfirmed at the time of purchase.

Nom. Box Size	Model Number[1]	Base Heat Rejection (MBH)	R-22 Tons[2]	Fan Motor (HP)	Airflow Rate (CFM)	Pump Motor (HP)	Spray Flow Rate (GPM)	Approximate Weight (lbs)			R-717 Operating Charge[4] (lbs)	Internal Coil Volume (ft³)	Remote Sump			F	H
								Ship Weight	Heaviest Section	Oper. Weight[3]			Drain Size[5] (in)	Vol. Req. (gal)	Approx. Oper. Weight (lbs)		
24' x 24'	PCC-0996-2424N040	20,643	1,405	40	256,180	(4) 5	2,440	67,840	13,930	96,530	2,059	222	(4) 10	1,480	93,453	4'-9"	20'-6"
	PCC-1060-2424N060	21,970	1,495	60	299,330			62,410	12,570	90,770	1,729	187			87,693	4'-1"	19'-10"
	PCC-1172-2424N060	24,291	1,653	60	274,990			76,750	16,150	105,920	2,543	275			102,843	5'-4"	21'-1"
	PCC-1236-2424N080	25,618	1,743	80	305,360			71,860	14,930	100,760	2,262	244			97,683	4'-9"	20'-6"
	PCC-1320-2424N100	27,359	1,862	100	326,140			71,980	14,960	100,880	2,262	244			97,803	4'-9"	20'-6"
	PCC-1384-2424N100	28,685	1,952	100	308,130			81,150	17,250	110,580	2,796	302			107,503	5'-4"	21'-1"
	PCC-1460-2424N120	30,261	2,059	120	325,870			81,350	17,300	110,780	2,796	302			107,703	5'-4"	21'-1"
	PCC-1584-2424N160	32,831	2,234	160	354,930			82,100	17,490	111,530	2,796	302			108,453	5'-4"	21'-1"
	PCC-1420-2424N100	29,431	2,003	100	293,760			85,530	18,350	115,440	3,276	354			112,363	4'-1"	19'-10"
	PCC-1500-2424N120	31,090	2,115	120	310,490			85,730	18,400	115,640	3,276	354			112,563	4'-1"	19'-10"
	PCC-1580-2424N160	32,748	2,228	160	351,960			81,810	17,420	111,420	2,977	322			108,343	4'-1"	19'-10"
	PCC-1624-2424N160	33,660	2,290	160	337,920			86,490	18,590	116,400	3,276	354			113,323	4'-1"	19'-10"
24' x 36'	PCC-1947-2436N160	40,348	2,745	160	550,330	(4) 7.5	3,684	92,890	18,730	135,730	2,549	275	(4) 12	2,192	130,538	4'-1"	20'-2"
	PCC-1501-2436N060	31,118	2,117	60	416,890			95,860	19,470	138,940	2,795	302			133,748	4'-9"	20'-9"
	PCC-1738-2436N080	36,019	2,451	80	416,710			105,020	21,760	148,660	3,355	362			143,468	4'-9"	20'-9"
	PCC-2092-2436N160	43,370	2,951	160	512,130			106,500	22,130	150,140	3,355	362			144,948	4'-9"	20'-9"
	PCC-2223-2436N200	46,065	3,134	200	547,820			106,920	22,240	150,560	3,355	362			145,368	4'-9"	20'-9"
	PCC-1848-2436N080	38,306	2,606	80	389,430			119,410	25,360	164,160	4,463	482			158,968	4'-1"	20'-2"
	PCC-2037-2436N120	42,226	2,873	120	440,050			120,410	25,610	165,160	4,463	482			159,968	4'-1"	20'-2"
	PCC-2132-2436N160	44,187	3,006	160	509,240			114,970	24,250	159,350	4,087	441			154,158	4'-1"	20'-2"
	PCC-2254-2436N160	46,719	3,179	160	459,770			127,970	27,500	173,180	4,915	531			167,988	4'-1"	20'-2"
	PCC-2325-2436N200	48,189	3,279	200	512,200			121,310	25,840	166,060	4,463	482			160,868	4'-1"	20'-2"
	PCC-2400-2436N200	49,741	3,384	200	491,270			128,390	27,610	173,590	4,915	531			168,398	4'-1"	20'-2"
	PCC-2518-2436N240	52,191	3,551	240	518,820			128,790	27,710	173,990	4,915	531			168,798	4'-1"	20'-2"
24' x 40'	PCC-2159-2440N160	44,742	3,040	160	586,313	(4) 7.5	4,100	96,120	19,273	143,700	2,820	305	(4)12	2,268	99,916	4'-1"	20'-6"
	PCC-1710-2440N060	35,449	2,409	60	443,344			99,728	20,173	147,590	3,095	334			103,798	4'-9"	21'-1"
	PCC-1948-2440N080	40,383	2,744	80	441,029			109,968	22,733	158,450	3,718	402			114,658	4'-9"	21'-1"
	PCC-2143-2440N120	44,413	3,018	120	499,801			110,288	22,813	158,770	3,718	402			114,978	4'-9"	21'-1"
	PCC-2306-2440N160	47,786	3,247	160	545,080			111,168	23,033	159,650	3,718	402			115,858	4'-9"	21'-1"
	PCC-2436-2440N200	50,500	3,432	200	583,394			111,268	23,058	159,750	3,718	402			115,958	4'-9"	21'-1"
	PCC-2060-2440N080	42,686	2,901	80	413,573			126,240	26,803	175,960	4,956	535			132,176	4'-1"	20'-6"
	PCC-2210-2440N100	45,812	3,113	100	423,609			134,240	28,803	184,460	5,459	590			140,676	4'-1"	20'-6"
	PCC-2250-2440N120	46,634	3,169	120	467,009			126,560	26,883	176,280	4,956	535			132,496	4'-1"	20'-6"
	PCC-2302-2440N120	47,703	3,242	120	447,537			134,440	28,853	184,660	5,459	590			140,876	4'-1"	20'-6"
	PCC-2345-2440N160	48,608	3,303	160	540,558			120,880	25,463	170,180	4,537	490			126,396	4'-1"	20'-6"
	PCC-2468-2440N160	51,158	3,476	160	487,941			135,320	29,073	185,540	5,459	590			141,756	4'-1"	20'-6"
	PCC-2540-2440N200	52,638	3,577	200	544,823			127,540	27,128	177,260	4,956	535			133,476	4'-1"	20'-6"
	PCC-2615-2440N200	54,201	3,683	200	522,062			135,420	29,098	185,640	5,459	590			141,856	4'-1"	20'-6"
	PCC-2734-2440N240	56,668	3,851	240	551,139			136,424	29,349	186,650	5,459	590			142,866	4'-1"	20'-6"

PCC Structural Support

The recommended support arrangement for the PCC Evaporative Condenser consists of parallel structural members positioned as shown on the drawing below. In addition to providing adequate support, the members also serve to raise the unit above any solid foundation to ensure access to the bottom of the unit. The PCC Evaporative Condenser may also be supported on columns at the anchor bolt locations shown.

To support a PCC Evaporative Condenser on columns with an alternate support arrangement, or the optional structurally upgraded unit, consult your local BAC Representative.

NOTES:

1. Contact your local BAC Representative for multi-cell or structurally upgraded unit support.
2. Support members and anchor bolts shall be designed, furnished, and installed by others.
3. Design of support members and anchor bolts shall be in accordance with the strength and serviceability requirements of the applicable building code and project specifications.
4. Support members shall be level at the top.
5. Refer to the certified unit support drawing for loading and additional support requirements.
6. The length of the support members shall be at least equal to the length of the basin. Refer to engineering data for basin dimensions. Support data are tabulated in the table to the right.
7. If vibration isolation (provided by others) is used, the isolators should be located under a structural base that complies with one of the recommended support arrangements. Contact your local BAC Representative for all other isolator configurations.

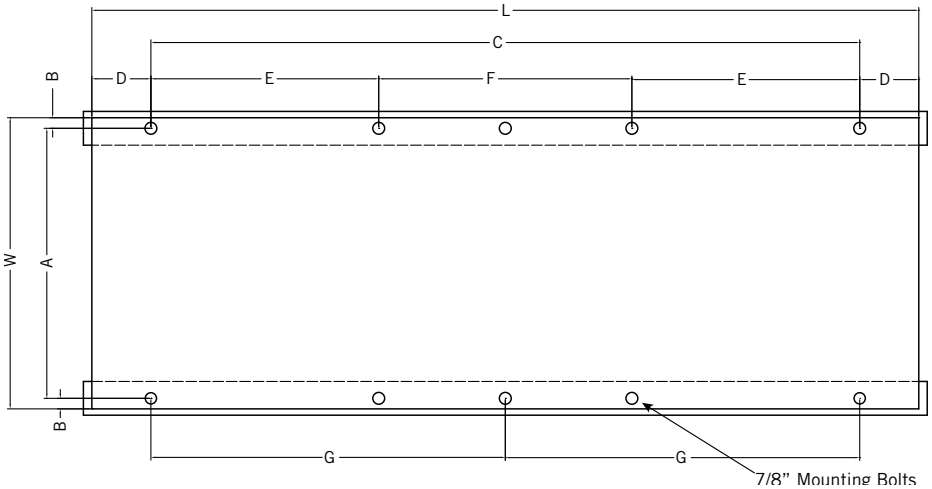

Single Cell Standard Unit Only

SINGLE CELL STANDARD UNIT ONLY

Model Number	L	W	A	B	C	D	E	F	G	Anchor Bolt Qty.
PCC-x-0406x	5'-11 3/4"	4'	3'-9 3/4"	1 1/8"	2'-5 1/4"	9 1/4"	—	—	—	4
PCC-x-0412x	11'-11 3/4"	4'	3'-9 3/4"	1 1/8"	10'-5 1/4"	9 1/4"	—	—	—	4
PCC-x-0709x	8'-11 3/4"	7'-3 1/4"	7'-1"	1 1/8"	8'-3 3/4"	4"	—	—	4'-1 7/8"	6
PCC-x-0718x	17'-11 3/4	7'-3 1/4"	7'-1"	1 1/8"	17'-3 3/4"	4"	5'-8 3/32"	5'-11 1/2"	—	8
PCC-x-1212x	11'-11 3/4"	11'-10"	11'-7 3/4"	1 1/8"	11'-3 3/4"	4"	—	—	5'-7 7/8"	6
PCC-x-1218x	17'-11 3/4	11'-10"	11'-7 3/4"	1 1/8"	17'-3 3/4"	4"	5'-8 3/32"	5'-11 1/2"	—	8
PCC-x-1220x	19'-11 3/4"	11'-10"	11'-7 3/4"	1 1/8"	19'-2 3/4"	6 1/2"	6'-7 3/8"	5'-11 1/2"	—	8

PCC Alternative Structural Support

For replacement installations, the PCC Evaporative Condenser has been designed to match the supports of many existing evaporative condensers without modifications. Shown below is the most common support arrangement which can be accommodated by the PCC. If individual point support is required, or if the existing support arrangement is not shown as below, consult your local BAC Representative for assistance.

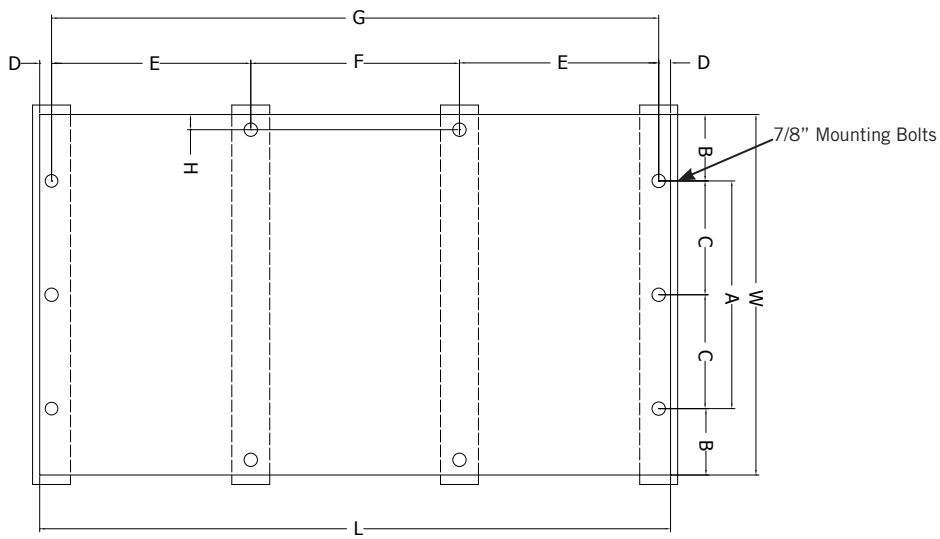

Single Cell Standard Unit – Alternative Structural Support

SINGLE CELL STANDARD UNIT – ALTERNATIVE STRUCTURAL SUPPORT

Model Number	L	W	A	B	C	D	E	F	G	H	Anchor Bolt Qty.
PCC-x-0406x	5'-11 3/4"	4'-0"	3'-4"	4"	3'-9 1/2"	1 1/8"	—	—	—	—	4
PCC-x-0412x	11' 11-3/4"	4'-0"	3'-4"	4"	11'-9 1/2"	1 1/8"	—	—	—	—	4
PCC-x-0709x	8'-11 3/4"	7'-3 1/4"	6'-7 1/4"	4"	—	1 1/8"	—	—	—	—	4
PCC-x-0718x	17'-11 3/4"	7'-3 1/4"	6'-7 1/4"	4"	—	1 1/8"	5'-11"	5'-11 1/2"	17'-9 1/2"	1 1/8"	8
PCC-x-1212x	11'-11 3/4"	11'-10"	11'-2"	4"	5'-7"	1 1/8"	—	—	—	—	6
PCC-x-1218x	17'-113/4"	11'-10"	11'-2"	4"	5'-7"	1 1/8"	5'-11"	5'-11 1/2"	17'-9 1/2"	1 1/8"	10
PCC-x-1220x	19'-11 3/4"	11'-10"	11'-2"	4"	5'-7"	1 1/8"	6'-11"	5'-11 1/2"	19'-9 1/2"	1 1/8"	10

NOTES:

1. Contact your local BAC Representative for multi-cell or structurally upgraded unit support.
2. Support members and anchor bolts shall be designed, furnished, and installed by others.
3. Design of support members and anchor bolts shall be in accordance with the strength and serviceability requirements of the applicable building code and project specifications.
4. Support members shall be level at the top.
5. Refer to the certified unit support drawing for loading and additional support requirements.
6. The length of the support members shall be at least equal to the length of the basin. Refer to engineering data for basin dimensions. Support data are tabulated in the table to the left.
7. If vibration isolation (provided by others) is used, the isolators should be located under a structural base that complies with one of the recommended support arrangements. Contact your local BAC Representative for all other isolator configurations.